PLATINUM Energy Services Corp. *"The Oilfield Equipment People"*™

DATA MANUAL FOR GAS LIQUIDS ENGINEERING LTD. C/O HUSKY ENERGY

B-49-C/93-P-2 /WOLVERINE DEVELOPMENT PROJECT

PLATINUM ENERGY SERVICES CORP.
UNIT NUMBER:
MS-18387

AQP 1316

Manufacturer of Gas Processing Equipment
Separators, Dehydrators, Line Heaters, Treaters, Tanks, Tubing, Gas / Electric Motors, Pumping Units
Phone: (403) 264-6688 Toll Free 1-888-745-4647 Fax: (403) 237-8271
Website: www.platinumenergy.net E-mail: sales@platinumenergy.net

PESC INSPECTION AND TEST PLAN	PAGE: 1 OF 6	**PO NO.:**	**ITEM NO:** Complete 6" Sales Meter Skid	**LEGEND** W - WITNESS R – REVIEW H – HOLD SU – SURVEILLANCE I – IN HOUSE S - SUBCONTRACTORS
	REV NO: 0	**PESC. JOB NO.: 18378**		
WORKS LOCATION: SHOP 1020 40 Ave. NE. Calgary, Ab. T2E 6Y1	**PESC CONTACT:** Chris Beer	**PESC APPROVAL:**	**DESCRIPTION OF ITEMS:** **PRE-FABRICATION**	**TAG NUMBER: Complete Package MS-18378**

TASK NO	TASK DESCRIPTION	LOCATION CODE (I OR S)	QUALITY CONTROL ACTIVITY	CONTROLLING PROCEDURE OR INSTRUCTION REF	ACCEPTANCE CRITERIA	VERIFYING DOCUMENTS	PESC	INSP	ENG	SIG	AI	CLIENT	NOTES
PRE-FABRICATION & MATERIAL SPECIFICATION													
1	Review Drawings & Specifications	I	QC Review		Husky/Gas Liquids Spec.		R	R	R				
2	Verify P.O.'s to Materials Received	I	QC Review	QC Manual	Product/ PO	Product/ PO	R	R					
a)	Size	I	QC Review		Product/ PO	Product/ PO	R	R					
b)	Quantity	I	QC Review		Product/ PO	Product/ PO	R	R					
c)	Thickness	I	QC Review		Product/ PO	Product/ PO	R	R					
d)	Grade	I	QC Review		Product/ PO	Product/ PO	R	R					
e)	Verify Manufacturers Markings	I	QC Review	QC Manual	Product/ PO	Product/ PO	R	R					
f)	Carbon/ Manganese ratio	I	QC Review		Mill Certificate	Material Test Reports	R	R					CE<0.45
g)	Check Mtr Chemical Composition	I	QC Review		ASME Sec.II Part A	Material Test Reports	R	R					CE<0.45
3	Review Welders Qualifications	I	QC Review		ASME Sec. IX	Welders Log	R	R					
4	Review WPS to be used	I	QC Review		ASME Sec. IX	WPS/ PQR	R	H					
5	Verify Hardness on WPS to be used	I	QC Review		Husky/Gas Liquids Spec.	WPS/ PQR	R	H					
6	Review Travel Sheets Hold/ Inspection points	I	QC Review			Travel Sheets	H	H					Vessels Only
PIPING FABRICATION													
7	Review Piping Specifications	I	QC Review	HuskySpecification Manual		Customer Spec	R	R					DSH/ASH/AUH
8	Verify Materials	I	QC Review		Husky/Gas Liquids Spec.	Material Test Reports	R	R					Nace MR 0175
9	Check Carbon/ Manganese & CE	I	QC Document		Husky/Gas Liquids Spec.	Material Test Reports	H	R					CE<0.45
10	Witness fit up	I	QC Document	QC Manual		Check list	SU	SU					Exhibit 21.2 Pressure piping checklis

PESC INSPECTION AND TEST PLAN	PAGE: 2 OF 6	**PO NO.:**	**ITEM NO:** Complete 6" Sales Meter Skid	LEGEND W - WITNESS R – REVIEW H – HOLD SU – SURVEILLANCE I – IN HOUSE S - SUBCONTRACTORS
	REV NO: 0	**PESC. JOB NO.: 18378**		
WORKS LOCATION: SHOP 1020 40 Ave. NE. Calgary, Ab. T2E 6Y1	**PESC CONTACT:** Chris Beer	**PESC APPROVAL:**	**DESCRIPTION OF ITEMS: Piping**	**TAG NUMBER: Complete Package MS-18378**

TASK NO	TASK DESCRIPTION	LOCATION CODE (I OR S)	QUALITY CONTROL ACTIVITY	CONTROLLING PROCEDURE OR INSTRUCTION REF	ACCEPTANCE CRITERIA	VERIFYING DOCUMENTS	PESC	INSP	ENG	SIG	AI	CLIENT	NOTES
PIPING FABRICATION & INSPECTION													
12	Verify Welding to Approved WPS	I	QC Witness	Customer Spec.	Husky/Gas Liquids Spec.	Initial ITP	W	W	R	CS			
13	Pre heat Maintenance	I	QC Witness	Customer Spec.	Husky/Gas Liquids Spec	Initial ITP	SU	SU		CS			10°C Pre heat
14	Witness In Progress Welding	I	QC Witness		Weld Procedure	Initial ITP	W	W		CS			Random
15	Visual Check all welds	I	QC Witness		Weld Procedure	Initial ITP	W	W		CS			
16	Check Dimensions and Orientation	I	QC Witness	GA Drawings	Husky/Gas Liquids Spec	Spool Sheets	W	W		CS			
17	Verify Welder Stamps on pipe	I	QC Witness	Customer Spec.			W	W		CS			
18	Verify Low temp Stamping	I	QC Witness	Customer Spec.	Husky/Gas Liquids Spec.		W	W		CS			
19	NDT Interpretation by Level II or III	I	QC Review	Code Requirement		NDE Reports Personal Qualifications	R	R		CS			Level II CGSB or Level II ASNT
20	Review Film and Reports	I	QC Review	Code Requirement	B31.3N	NDE Reports	R	R		CS			
21	Map RT c/w Welder ID Stamp	I	QC Document	QC Manual		Weld Map	R	R		CS			
22	Magnetic particle Fillet welds	S		ASME Div. 1 Append.6 Sec.V Article 7	Meet Code	NDE Reports	W	R		CS			10% if no PT
23	UT per Customer Spec.		N/A	ASME Div. 1 Append.12 Sec.V Article 4	Meet Code	NDE Reports	W	R		N/A			RT Performed
24	PT per Customer Spec.		N/A	ASME Div. 1 Append.8 Sec.V Article 6	Meet Code	NDE Reports	W	R		N/A			Magnetic Particle Performed
25	Hardness Test of welds	S	N/A		Husky/Gas Liquids Spec	Report	W	R		CS			
26	RT Socket Welds for fit up	S	N/A		Meet Code/ Spec.	Film/ Reports	W	R		N/A			5% of socket welds for fit up
27	PWHT min. Per Customer / Code Specification	S	N/A		Meet Code/ Spec.	PWHT Chart	W	R		CS			Not Required Wall Thickness under 19mm

PESC INSPECTION AND TEST PLAN	PAGE: 3 OF 6	**PO NO.:**	**ITEM NO:** Complete 6" Sales Meter Skid	LEGEND W - WITNESS R – REVIEW H – HOLD SU – SURVEILLANCE I – IN HOUSE S - SUBCONTRACTORS
	REV NO: 0	**PESC. JOB NO.: 18378**		
WORKS LOCATION: SHOP 1020 40 Ave. NE. Calgary, Ab. T2E 6Y1	**PESC CONTACT:** Chris Beer	**PESC APPROVAL:**	**DESCRIPTION OF ITEMS: Piping, Structural Steel**	**TAG NUMBER: Complete Package MS-18378**

TASK NO	TASK DESCRIPTION	LOCATION CODE (I OR S)	QUALITY CONTROL ACTIVITY	CONTROLLING PROCEDURE OR INSTRUCTION REF	ACCEPTANCE CRITERIA	VERIFYING DOCUMENTS	PESC	INSP	ENG	SIG	AI	CLIENT	NOTES
PIPING FABRICATION & INSPECTION													
28	PWHT Chart Checked		N/A							CS			Minimum Temperature of 620°C
29	Mill test reports for all materials	I	QC Review		Husky/ASME Sec.II part A	Material Test Report	R	R		CS			
30	Hydro piping 1.5 x MAWP	I	QC Review	Spool Sheets	B31.3 Code/ Husky Spec.		H	H		CS			
31	Verify test gauges	I	QC Review	QC Manual	Gauge Certificates	Gauge Log Book	W	W		CS			
32	Witness Hydro's	I	QC Review		Husky/ B31.3 Code	Hydro Test Report	H	H		CS			
STRUCTUAL FABRICATION & INSPECTION													
33	Review Skid Drawing	I	QC Review				R	R	R	CS			
34	Review Customer Specifications	I	QC Review		Husky Spec.		H	R	R	CS			
35	Skid Lay out checked	I		Skid Drawing	Husky Spec.		W	W		CS			
36	Skid dimension checked	I	QC Verify	Skid Drawing	Husky Spec.		W	W		CS			
37	Joint fit up checked	I					W	SU		CS			
38	In progress Weld check	I					W	SU		CS			
39	Final Weld Check	I	QC Verify				H	W		CS			
a)	Seal Welds	I	QC Verify				R	W		CS			
b)	Stitch welds	I	QC Verify				R	W		CS			
c)	All joints welded	I	QC Verify				R	W		CS			
d)	Spatter Removed	I	QC Verify				R	W		CS			
e)	Checker plate	I	QC Verify							CS			
f)	MPI Lifting Lugs	S	QC Verify	ASME VIII Div. 1 Append.6 Sec.V Article 7	Meet Code	NDE Reports	W	R		N/A			
40	Spray Foam	S	QC Verify				SU	SU		CS			3" Insulate under side of skid

PESC INSPECTION AND TEST PLAN	PAGE: 4 OF 6	**PO NO.:**	**ITEM NO:** Complete 6" Sales Meter Skid	**LEGEND** W - WITNESS R - REVIEW H - HOLD SU - SURVEILLANCE I - IN HOUSE S - SUBCONTRACTORS
	REV NO: 0	**PESC. JOB NO.: 18378**		
WORKS LOCATION: SHOP 1020 40 Ave. NE. Calgary, Ab. T2E 6Y1	**PESC CONTACT:** Chris Beer	**PESC APPROVAL:**	**DESCRIPTION OF ITEMS:**	**TAG NUMBER: Complete Package MS-18378**

TASK NO	TASK DESCRIPTION	LOCATION CODE (I OR S)	QUALITY CONTROL ACTIVITY	CONTROLLING PROCEDURE OR INSTRUCTION REF	ACCEPTANCE CRITERIA	VERIFYING DOCUMENTS	PESC	INSP	ENG	SIG	AI	CLIENT	NOTES
	PIPE ERECTION & INSPECTION												
41	Mount Piping on Skid	I	QC Witness	Spool Drawing	Spool Drawing		W	W		CB			
42	Pipe Supports installed/Welded	I	QC Verify		Husky Design Supports		W	W		CB			
a)	Enough supports	I	QC Verify				W	W		CB			
b)													
43	Stud/Nut/Gasket	I	QC Verify	Spec.	Husky Spec	Spool Sheet	W	W		CB			
44	Verify Valves/ Components	I	QC Verify	P&ID	Husky Spec	P&ID	W	W		CB			
a)	Valves Tagged	S	QC Verify	PO/ P&ID	Husky Spec		W	W		N/A			
b)	Direction of Flow	I	QC Verify	P&ID	P&ID	P&ID	H	H		CB			
45	Rust Inhibitor used on Flanges	I	QC Verify	Platinum Spec.	Husky Spec		SU	SU		CB			Jet Lube Moly Mist
46	Hydro Completed Piping	I	QC Review	Spool Sheets	B31.3 Husky		H	H		CB			Hydro Complete To Test Joint seals
47	Verify test gauges	I	QC Review	QC Manual	Gauge Certificates	Gauge Log Book	W	W		CB			
48	Witness Hydro's	I	QC Review		Husky/ B31.3 Code	Hydro Test Report	H	H		CB			
49	Dry Out Piping	I	QC Verify				W	W		CB			
	SAND BLASTING and PAINTING												
50	Sand Blasting	S	QC Review	Spool Sheets	SSPC SP-6	Pro Coat Report	W	R	R	CB			Commercial Blast
51	Painting	S		Spool Sheets			W	R	R	CB			2 coats DTM F34 warm grey

PESC INSPECTION AND TEST PLAN	PAGE: 5 OF 6	**PO NO.:**	**ITEM NO:** Complete 6" Sales Meter Skid	LEGEND W - WITNESS R – REVIEW H – HOLD SU – SURVEILLANCE I – IN HOUSE S - SUBCONTRACTORS
	REV NO: 0	**PESC. JOB NO.: 18378**		
WORKS LOCATION: SHOP 1020 40 Ave. NE. Calgary, Ab. T2E 6Y1	**PESC CONTACT:** Chris Beer	**PESC APPROVAL:**	**DESCRIPTION OF ITEMS:**	**TAG NUMBER: Complete Package MS-18378**

TASK NO	TASK DESCRIPTION	LOCATION CODE (I OR S)	QUALITY CONTROL ACTIVITY	CONTROLLING PROCEDURE OR INSTRUCTION REF	ACCEPTANCE CRITERIA	VERIFYING DOCUMENTS	PESC	INSP	ENG	SIG	AI	CLIENT	NOTES
STEEL BUILDINGS													
51	Review Building Spec.			Ronaco Drawing	Husky Spec	Ronaco Drawing	H	R	R				
a)	Exterior Color	S	QC Verify	P&ID	Husky Spec	Husky Quote	W	W					Gold c/w Metro Brown Trim
b)	Wall Insulation	S	QC Verify	P&ID	Husky Spec	Husky Quote	W	W					R12
c)	Ceiling Insulation	S	QC Verify	P&ID	Husky Spec	Husky Quote	W	W					R20
d)	Vapor Barrier	S	QC Verify	P&ID	Husky Spec	Husky Quote	W	W					6mm
e)	Interior Liner	S	QC Verify	P&ID	Husky Spec	Husky Quote	W	W					26 gauge Fluted White Liner
f)	Flashing	S	QC Verify		Husky Spec	Husky Quote	W	W					
h)	Canopies	S	QC Verify	P&ID	Husky Spec	Husky Quote	W	W					Door Canopies
i)	Ice Racks	S	QC Verify	N/A	Husky Spec	Husky Quote	W	W					Double Glazed
j)	Windows	S	QC Verify		Husky Spec	Husky Quote	W	W					2- 40" x 40" Horiz. slider
k)	Doors	S	QC Verify		Husky Spec	Husky Quote	W	W					2- 3' x 7' single man doors
l)	Eaves trough & Downspouts	S	QC Verify		Husky Spec	Husky Quote	W	W					
m)	Vents & Fans	S	QC Verify		Husky Spec	Husky Quote	W	W					
n)	Vents	S	QC Verify	P&ID	Husky Spec	Husky Quote							2 – 12" x 12" low vents c/w sliders
o)	Keys	S	QC Verify		Husky Spec	Husky Quote	W	W					
INSTRUMENTATION, GENERAL													
52	Review Instrumentation Specification	I	QC Review		Husky Spec		H	R	R				
53	Pressure containing Instruments	I	QC Verify		4.1.3	AB- 24	W	W					Must have Valid CRN# for Alberta
54	Thread compounds	I	QC Witness		Husky Spec		SU	SU					Must be CSA Approved
55	Teflon tape	I	QC Verify		Husky Spec		SU	SU					Shall not be used for instrument connections
56	Tube Fittings	I	QC Verify		Husky Spec		SU	SU					Shall be Swagelok type Compression Fittings
57	Tubing (316 s s)	I	QC Verify		Husky Spec		SU	SU					3/8" - 0.035" wall ½" – 0.065" wall

PESC INSPECTION AND TEST PLAN	**PAGE: 6 OF 6**	**PO NO.:**	**ITEM NO:** Complete 6" Sales Meter Skid	LEGEND W - WITNESS R - REVIEW H - HOLD SU - SURVEILLANCE I - IN HOUSE S - SUBCONTRACTORS
	REV NO: 0	**PESC. JOB NO.: 18378**		
WORKS LOCATION: SHOP 1020 40 Ave. NE. Calgary, Ab. T2E 6Y1	**PESC CONTACT**: Chris Beer	**PESC APPROVAL:**	**DESCRIPTION OF ITEMS:**	**TAG NUMBER: Complete Package MS-18378**

TASK NO	TASK DESCRIPTION	LOCATION CODE (I OR S)	QUALITY CONTROL ACTIVITY	CONTROLLING PROCEDURE OR INSTRUCTION REF	ACCEPTANCE CRITERIA	VERIFYING DOCUMENTS	PESC	INSP	ENG	SIG	AI	CLIENT	NOTES
INSTRUMENTATION, GENERAL													
58	Instrument Mounting	I	QC Verify		Husky Spec		R	R	R				
59	Mount Level	I	QC Verify				SU	SU					
60	Instrumentation Installation	I	QC Verify	P&ID			SU						
61	Mount Accessible	I	QC Verify				SU	SU					
62	Mount per Manufacturer	I	QC Verify				SU	SU					
63	Instrument Process Connections	I	QC Verify				R	R	R				
64	Block & Bleed Valves	I	QC Verify	P&ID			W	W					
65	Instrument Venting	I	QC Verify	P&ID			R	R	RR				To Vent Header or to out side of building
66	Tube Vents	I	QC Verify	P&ID			SU	SU					
67	Instrument Gas/ Air	I	QC Review	P&ID			R	R					
68	Instrument Raceway	I	QC Verify				SU	SU					
a)	Size of Raceway	I	QC Witness				W	W					
b)	Fully removable	I	QC Witness				W	W					
69	Inspection & Testing	I	QC Review				H	H					
70	Hydro, Leak & Function Tests	I	QC Witness			Hydro Test Affidavit	H	H					
71	Instruments	I	QC Verify				W	W					
72	Electrical	I	QC Verify				W	W					Cable connections shall be looped
SHIPPING													
73	Flanges, Threads	I	QC Verify				W	W					Flanged openings capped with Plastic covers & Moly Mist
74	Vessel Insulation	S					N/A	N/A					
75	All Documents Ready	I	QC Review	QC Package & Manuals		QC Package & Manuals	H	H	R				Documents ready @ time of shipping
76	Pre-Shipping Inspection	I	QC Review	QC Package & Manuals		QC Package & Manuals	H	H	R				
77	Shipping Release	I	QC Review			Husky	H	H					

Platinum Energy Services Corp. **PACKAGE TRAVEL SHEET**

1020 40th Avenue SE

Calgary, Alberta T2E 6Y1

** : Hold Point * : Inspection Point

INSPECTOR:	Ian Thompson			JOB: MS-18378	Shipping Date: July 10
Drawing NO.:	18378-PIO-01	Rev.NO.: 2		Package Type: Meter Skid	

Seq.	Item	Comments	Q.C.	Date	Insp. Hold Points	Comments	Owner	Date
1.	Drawings Issued for construction		CB	June 1/09	*			
2.	Customer Specs read		CB	June 1/09	*			
3.	Skid layout checked on Fit-Up (Prior to Welding)		CB	June 4/09	**			
4.	Skid Welds checked		CB	June 5/09	**			
5.	Vessel placement correct & attached		N/A	—	**			
.6	CE. Mtr's Checked / Chemical Requirements		CB	6-4-09	*			
7.	W.P.S. Registered checked Welders Qualified		CB	6-4-09	*			
8.	Radiography Complete Weld ID checked, mapped		CB	6-14-09	*			
9.	N.D.E Level II or III		CB	6-14-09	*			
10.	Other NDE.	Visual 100%	CB	6-14-09	*			
11.	P.W.H.T. Chart Checked		CB	6-16-09	*			
12.	Hardness Testing Weld/ HAZ/ Base Metal		CB	6-19-09	*			
13.	Internals Coating		N/A	—	*			
14.	HYDRO'S 2160psi Gauge#	Gas Inlet	CB	see affidavits	**			
	HYDRO'S 2160psi Gauge#	Gas Outlet	CB	"	**			
15.	HYDRO'S Gauge#	Fuel Gas	N/A	—	**			
	HYDRO'S 1872psi Gauge#	Complete Pkg.	CB	"	**			
16.	Checked against P&ID		CB	6-24-09	*			
17.	Valves Correct (Flow/Type/Open&Closed)		CB	6-24-09	*			
18.	All nuts/ Unions/ clamps tight		CB	6-24-09	*			
19.	Heater is Complete		CB	6-26-09	*			
20.	Paint Colour Correct		CB	6-26-09	*			
21.	Building Complete (colour/ vapour barrier etc ...)		CB	6-30-09	*			
22.	Instrumentation Complete				*			
23.	Function Test				**			
24.	Nozzle Orientation/ Elevation				*			
25.	Expanded Metal in Spec Blind		N/A	—	*			
26.	Proper Studs, Nuts, Gaskets Installed ;	FLEXICARB B7M, 2HM	CB	6-19-09	*			
27.	Insulation installed				*			
28.	All connections inside & out silicone & taped				*			
29.	AB-24 for registered fittings completed		N/A	—	**			
30	Sticker On Door and Keys hung in proper Location				*			
31	ABSA Registration for piping over 0.5 Cu. M. and Notified		N/A	—	*			
32	AB-83, As Built and Spool Sheets completed		CB	6-29-09	**			
33	All Documents correct,				**			

ABSA
the pressure equipment safety authority

PRESSURE PIPING CONSTRUCTION AND TEST DATA REPORT

In accordance with the provisions of the PESR Section 31(1)

Shop Construction ☒; **Field Construction** ☐;
Final Data Report ☒; **Partial Data Report** ☐ (from one ABSA- authorized Contractor to another ABSA- authorized Contractor).

Complete both sides of this Form

1. Constructed By: Platinum Energy Services Corp. Owner's Job No: MS-18378
(Name of ABSA authorized primary contractor or subcontractor)
1020 40th Ave. NE. Calgary, Ab. T2E 6Y1
(Address)
Certificate of Authorization Permit No. AQP-1316 Expiry Date: July 25, 09

2. Constructed For: Gas Liquids Engineering Ltd.
(Name of primary contractor if different from above)
300 2749 39th Ave. NE. Calgary, Ab. T1Y 4T8
(Address)
Certificate of Authorization Permit No. AQP- Expiry Date:
(Required when the primary contractor undertakes some/all of the quality functions, e.g., NDE, PWHT, Tie-in, fabrication, hydro test, final assembly etc.)

3. Owner: Husky Energy Inc. 707 8th Ave. SW. Calgary, Ab. T2P 1H5
(Name and address)
B-49-C/93-P-2 / Wolverine Development Project
(Location of installation)
Certificate of Authorization Permit No. AQP- Expiry Date:
(Required when the owner undertakes some/all of the quality functions, e.g., NDE, PWHT, Tie-in, fabrication, hydro test, final assembly etc.)

4. Piping Design Alberta Registration No.: PP-
(Required if aggregate piping volume is over 0.5m³)

5. WP No.: WP-1863.2 ; Company: Platinum Energy Services Corp. Owner's WP No. (If used): WP-
(Alberta Registration No.) (Alberta Registration No.)
WPS No(s). used: PES-02, PES-04 ; Owner's WPS No(s). (If used):

6. Code: ASME B31.1 Non Boiler External Piping ☐; ASME B31.1 Boiler External Piping ☐;
ASME B31.3 ☒ - Service category: Normal ☒, D ☐, M ☐, High Pressure ☐; B31.5 ☐; B31.9 ☐.

Drawing No. Rev. No. Line No.	Fluid (Air/Stm. Etc.)	Des. Press. kPa	Des. Temp.°C (Max. & Min.)	Pressure Test kPa	Test Medium	Pipe Mat'l Spec. & Grade	C.A. mm	Pipe NPS & Schedule	Flange Material & Rating	PWHT/ Preheat Temp.°C	R.T. %	Other NDE
18378-ISO-01 Gas Inlet	W.O.G.	14890 kPa	-29°C / 50°C	22335 kPa	Glycol / H2O mix	SA333Gr.6	3 mm	4", 6", sch 160	SA350LF2 #900RF	1150°F / 60 mins	100%	MPI / Impact Testing
18378-ISO-02 Blow Down To Flare	W.O.G.	14890 / 1920 kPa	-29°C / 50°C	22335 / 2880 kPa	Glycol / H2O mix	SA106B / SA333GR.6	3 mm	2", 4", sch Std, 80, 160	SA105N #900 / 150RF SA350LF2 #900RF	1150°F / 60 mins	100%	MPI / Impact Testing
18378-PID-01 Threaded Pipe	W.O.G.	1920 psi	-29°C / 50°C	2880 psi	Glycol / H2O mix	SA106B	3 mm	1" sch 160	SA105N 3000# Fittings	N/A	N/A	Visual

Partial Data Reports certified by sub-contractors are listed below and attached to this Data Report ☐

No.	Line No.	Spool No.	Drg. No. (with Rev. No.)	Sub-contractor (Name)	AQP No. (if from Alberta)	Expiry (if from Alberta)

Remarks: For partial data report provide information about the code work that was not completed by the subcontractor (e.g., hydrotest, PWHT etc.). For final data report provide information about the code work that was not completed by subcontractors and subsequently completed by the primary contractor (e.g., hydrotest of entire assembly, PWHT etc.)

Endorse certificate 'A' or 'B'

A. CERTIFICATE OF COMPLIANCE

Signed by the subcontractor when supplying this certificate as a

Partial Data Report

We certify that the statements in this Data Report are correct and that materials, construction and workmanship of the piping fabrication conform to the registered quality system and the applicable Piping code(s).

Date: _____ _____

Subcontractor

_____ _____

Print Authorized Representative's Name Signature

This certificate is not valid unless it forms part of a Final Data Report signed by Primary Contractor

B. CERTIFICATE OF COMPLIANCE

Signed by the primary contractor when supplying this certificate as a

Final Data Report

We certify that the statements in this Data Report are correct and that piping job no. MS-18378 described in this Data Report was constructed in accordance with the Province of Alberta Safety Codes Act and Regulations, and applicable ASME Piping Code(s).

Date: June 29, 09 Platinum Energy Services Corp.

_____

Primary Contractor

Chris Beer

Print Authorized Representative's Name Signature

CERTIFICATE OF INSPECTION

I, the undersigned, employed by _____ have inspected the piping job no. _____ described in this Pressure Piping Construction and Test Data Report and state that, to the best of my knowledge and belief, the Contractor has constructed this piping in accordance with the applicable Sections of the ASME Piping Codes and the Province of Alberta Safety Codes Act and Regulations.

Date: _____ Date: _____

_____ Name: _____ Sign.: _____

Print Owner's Inspector's Name Owner's Inspector's Signature

ABSA Safety Codes Officer
(BOILER EXTERNAL PIPING ONLY)

Current version of this Form may be obtained from www.absa.ca

EXHIBIT 20.1 PRESSURE PIPING SPECIFICATION SHEET

PRESSURE PIPING SPECIFICATION SHEET

(For Construction/Repair/Alteration of Pressure Piping Systems Less Than or Equal to 0.5 Cubic Meters, Aggregate Volume)

Owner: Husky Oil Operations Ltd. Contractor Platinum Energy Services Corp AQP: 1316

Plant Location: 1020 40 Ave. NE. Calgary, Ab. Job 18378

Material List				Piping Sketch (Reference attached drawings if appropriate)			
Item No.	Description	Mat'l Spec. & Grade	Sch./ Rating	(use for recording RT No's. & Welder Symbols) See weld map.			
18378-ISO-01	4",6" smls pipe	SA 333 Gr. 6	sch 160				
	2",4",6" RFWN	SA 350 LF2	sch 160/900				
	2" W.O.L	SA 350 LF2	sch 160	Cont...			
	4" 90° LR. elbow	SA 420 WPL6	sch 160	2" 90° LR elbow	SA 420-WPL6	sch 160	
	6"x4" red. T.	SA 420 WPL6	sch 160	2" 90° LR elbow	SA 234 WPB	sch 80	
18378-ISO-02	2" smls pipe	SA 106 B	sch 80	2x2" str. tee	SA 234/WPB	sch 80	
	2" smls pipe	SA 333 Gr. 6	sch 160	2"x2" str. tee	SA 420 WPL6	sch 160	
	4" smls pipe	SA 106 B	std	4"x2" conc. Reducer	SA 420 WPL6	sch 160	
	2",4" RFWN	SA 350 LF2	sch 160/900	4"x2" conc. Red.	SA 234 WPB	std. x 80	
	2" RFWN	SA 105 N	sch 80/900	4"x2" Red. Tee	SA 234 WPB	std x 80	
	4" RFWN	SA 105 N	std/150	2"x1" Con. Swage	SA 234 WPB	80 x 160	

Line No.	Design Pressure	Design Temp. Min. / Max.	Corr. All.	Code ASME B31.1/B31.3	Service (e.g., Normal, Cat. D, M, K)	Severe Cyclic Yes/No	Test Pressure	Test Medium
18378-ISO-01	2159 psi	-20°F / 122°F	3mm	B31.3	Normal	Yes	3238 psi	H_2O/ 6l glycol
18378-ISO-02	2159 / 278 psi	-20°F / 122°F	3mm	B31.3	Normal	Yes	3238 / 417 psi	H_2O/ 6l glycol

(Note: Pneumatic tests must have prior approval from ABSA.)

Welding Procedure Specification No's:

Line No.	MT / PT Extent %	Radiography Extent %	Hardness Testing	Ultrasonic - Other NDE Description / Extent %	Other Requirements
18378-ISO-01	100%	100%	10%	No	No
18378-ISO-02	100%	100%	10%	No	No

NDE Contractor: Western Inspection Post Weld Heat Treatment (Yes)/N.A.: Yes

Post Weld Heat Treatment Time/Temp.: 1150°F / 60 mins PWHT Contractor: Integrated Metallurgical Services

Approved by Owner: _____ Date: _____

Approved by Contractor: _____ Date: June 12/09

Comments: _____

WORK COMPLETED AND ACCEPTED (AB-83 COMPLETED)

Date: June 12/09

EXHIBIT 20.2 PRESSURE PIPING EXAMINATION CHECKLIST

PRESSURE PIPING EXAMINATION CHECKLIST				
		JOB NUMBER:	MS-18378	
NO.	FUNCTION	Q.C. MANUAL REFERENCE	SIGNATURE OR INITIAL AND DATE	
			Q.C. INSPECTOR	OWNER'S INSPECTOR
1	DRAWINGS: ABSA registration over 0.5 Cu. M. Approved by Owner. Approved for Construction (signed & dated).	20.3,20.4	—	
2	ABSA Safety Codes Officer and Owner's Inspector notified.	20.15, 20.21	—	
3	Registered Welding Procedure Specifications, Q.C. Manual and Forms available at site, Job File started.	20.20	CB 6-1-09	
4	Welders qualified for WPS's and have valid Performance Qualification cards. Welders Log completed. WPS reviewed with Welders.	11.4, 20.18	CB 6-1-09	
5	Material checked against P.O., drawings, and specifications. Identification confirmed. Colour coding applied.	20.12, 20.14	CB 6-4-09	
6	Sample of each Welder's work examined, including root spacing, alignment, cleaning, joint preparation, preheat and electrode control.	11.5, 20.21	CB 6-1-09	
7	Non-destructive Examination completed. Reports and radiographs reviewed, signed by Level II or III, Radiograph I.D. detailed on drawings.	13.3	CB 6-14-09	
8	Visual Examination of all completed welds. Welders I.D. stamped and recorded on drawings.	11.5, 20.21	CB 6-14-09	
9	Heat Treatment verified and recorded on drawings.	14.6	CB 6-16-09	
10	Each system checked against specifications and drawings before test, using Exhibit 21.3 and Exhibit 21.4.	20.21, 20.23	CB 6-24-09	
11	All deficiencies recorded and signed off by Q.C.I. and Owner's Inspector before test.			
12	Pressure Test checked. Gauge calibration verified, gauge #'s recorded.	20.23	CB 6-19-09	
13	System checked after test. Deficiencies recorded and corrected. (Exhibit 21.4)	20.23	CB 6-19-09	
14	Construction data reports (AB-83) prepared and signed by QCI and Owner's Inspector.	20.21(g)		
15	Declaration form (AB-81) submitted to ABSA	20.20(c)	—	
16	As built drawings accepted by Owner.	20.21(h)	CB	

EXHIBIT 20.3 PRESSURE PIPING EXAMINATION GUIDE

PRESSURE PIPING EXAMINATION GUIDE MS-18378		
	EXAMINATION PRIOR TO PRESSURE TEST (PUNCHING)	Q.C. INSP.
1.	Pipe Material; schedule and specification correct.	CS
2.	Flanges; ratings, schedule and material specification correct.	CS
3.	Fittings; tees, return bends, reducers, couplings and weld-o-lets etc. Correct schedule and material specification.	CS
4.	Valves; identification – Manufacturer's name tag, etc., correct.	CS
5.	Valves; installed correctly, flow direction, accesses, rising stems free from obstructions, clearance for removal adequate.	CS
6.	Lubrication fittings, drains, etc., installed as required.	—
7.	Bolts, Studs, Nuts; length and material correct. Studs at least flush with heads (max. Thread exposure beyond nut should be about 2 threads)	CS
8.	Gaskets are correct type, material, size, etc.	CS
9.	All welding satisfactory and traceable to Welder's symbol.	CS
10.	Seal welding complete - all threads covered.	—
11.	All attachment welds satisfactory.	—
12.	All N.D.E., heat treatment complete, records filed.	CS
13.	Guide anchors and shoes required installed correctly. (High temp. lines)	—
14.	Line supports adequate – supports to be checked against drawings.	—
15.	Spring hangers - correct type, correct installation.	—
16.	Lines have adequate allowance for expansion.	—
17.	Bellows type expansion joints - correct type, pressure rating and correct installation.	—
18.	Required cold spring applied.	—
19.	Orifice runs have specified straight length of pipe - located correctly etc.	CS
20.	All deficiencies recorded on Punch List.	
Q. C. Inspector Signature:		Date: June 12/09

EXHIBIT 20.4 PRESSURE TEST EXAMINATION GUIDE

PRESSURE TEST EXAMINATION GUIDE MS-18378		
	PRESSURE TEST PREPARATION	Q.C. INSP.
1.	All punch list items corrected.	
2.	Test blinds are of correct thickness.	CB
3.	All items which could be damaged by test isolated or removed (control valves, safety valves, instruments, expansion joints, etc.)	CB
4.	Equipment with internals (i.e. filters) that could be damaged is isolated as required.	—
5.	Vents and drains correctly installed.	CB
6.	Open and Closed position of all valves verified.	CB
7.	Shipping bars in place – bellows.	—
8.	Hanger stops in place.	—
	PRESSURE TEST COMPLETION	Q.C. INSP.
1.	All temporary blinds (blanks) removed.	CB
2.	Temporary gaskets changed for correct gaskets.	CB
3.	Temporary supports removed.	—
4.	Shipping bars removed from bellows.	—
5.	Spring hanger stops removed - cold setting checked.	—
6.	Pressure Relief Valves – "UV" or "V" symbol as applicable and at correct set pressure and capacity installed.	—
7.	Safety valve vents are correct size - adequately supported - drain holes and or weather hoods installed.	—
8.	Screens for pumps and compressors installed (initial start-up and permanent screens).	—
Q. C. Inspector Signature:		Date: June 12

PLATINUM
Energy Services Corp.

AFFIDAVIT OF HYDROTEST

DATE: June 19/09

JOB #: MS-18378

DESCRIPTION: 6", 4", 2" sch 160 900 ansi Gas Inlet

TAG #: 18378-ISO-01-A, B
18378-ISO-02-B

TEST MEDIUM: WATER ____ 60% GLY ✓

TEST PRESSURE: 3238 PSIG

TEMPERATURE: Ambient

HOLD PERIOD: One Hour

GAUGE # PG-5000
PG-1001-2

COMMENTS: No leaks were detected.

AUTHORIZED SIGNATURE

WITNESSED BY

Chris Beer
Quality Control

1020 –40th Avenue NE, Calgary, Alberta, Canada, T2E 6Y1
Telephone: (403) 543-3760 Fax: (403) 543-3765

PLATINUM
Energy Services Corp.

AFFIDAVIT OF HYDROTEST

DATE: June 19/09

JOB #: MS-18378

DESCRIPTION: 2", sch 160, 900 ansi to 4", std, 150 ansi Blow down to flare line

TAG #: 18378-ISO-02-A

TEST MEDIUM: **WATER** ____ **60% GLY** V

TEST PRESSURE: 417 **PSIG**

TEMPERATURE: **Ambient**

HOLD PERIOD: **One Hour**

GAUGE # JW040901-22

PG-1004

COMMENTS: **No leaks were detected.**

AUTHORIZED SIGNATURE

Chris Beer
Quality Control

WITNESSED BY

1020 –40th Avenue NE, Calgary, Alberta, Canada, T2E 6Y1
Telephone: (403) 543-3760 Fax: (403) 543-3765

WESTERN INSPECTION LTD.
3231 - 58th AVENUE, S.E., CALGARY
ALBERTA T2C 0B4
TEL: (403) 279-4540
FAX: (403) 236-3043

RADIOGRAPHIC EXAMINATION REPORT #CGY-336541

Platinum Energy Services Corp.
#750, 333 - 11th Avenue SW
Calgary, AB T2R 1L9
Tel: (403) 543-3760 Fax: (403) 543-3765

Job Number: MS-18378
PO Number: N1230787

Date of Exam: Monday, Jun 15 2009
Job Location: Western's Shop
Technicians: Clark Mitchell SNT Lev. II

Acc Codes: ANSI/ASME B31.3 Sour
Inspected: Pre Heat Treat
Material: Carbon Steel
Isotope: IR 192
Focal Spot: 2x3 mm
Curies: 41
Degree: 100%
Processing: Automatic
Units: in

Legend:

* (Loading)	S = Single
	D = Double
	T = Triple
# (Result)	ACC = Accept
	REJ = Reject
	RETEST = Retest
@ (Degree)	1 = Acceptable
	2 = Slight
	3 = Reject

Note: SFD Does not include reinforcement

	Test Information									Film Information				Result Information	
		Tech	IQI	Wldr	Dia	Thk	Len	Sch	SFD	SSOFD	*	From - To	Type	Size	#	@ Discontinuity	From - To
1	Test: X3R1	RT3	1B	B	6	.719		160	3.312	1.094	S	7 - 15	D5-GEV- I	3.5x17	ACC	1 Slag	
2	Test: X4R1	RT3	1B	B	6	.719		160	3.312	1.094	S	0 - 6	D5-GEV- I	3.5x17	ACC		
3	Test: X10R1	RT1	1B	J	4	.531		160	4.5		S	2 - 6	D5-GEV-I	3.5x8.5	ACC	1 Slag	
4	Test: X14R1	RT1	1B	J	4	.531		160	4.5		S	2 - 6	D5-GEV-I	3.5x8.5	ACC ACC	1 Concavity 1 Porosity	
5	Test: X21R1	RT1	1B	B	2	.343		160	2.375		S	4.5 - 7	D4-GEV- I	2.75x5.6	ACC		
6	Test: X33R1	RT1	1B	B	4	.237		STD	4.5		S	2 - 6 10 - 0	D4-GEV- I D4-GEV- I	2.75x8.5 2.75x8.5	ACC ACC	1 Slag 1 Porosity	

RT 1: T.291 g) S.O.D., Nominal Wall Thickness Plus Inside Diameter of Pipe T.291 h) S.S.O.F.D., Wall Thickness Plus Allowable Weld Reinforcement (Both Sides).
RT 3: T.291 g) S.O.D., half of the pipe I.D. less 1/2 of max. allowable reinforcement. T.291 h) S.S.O.F.D., nominal wall thickness plus reinforcement.

Units:

Qty	Code	
1	2/160/00	Repair
2	4/160/00	Repair
1	4/STD/00	Repair
2	6/160/00	Repair

Sign Here: _____
Keith Muise CGSB Lev. II, SNT Lev. II

Sign Here: _____
Customer Representative:

IMPORTANT: Please Sign And Return the Yellow Copy to Western Inspection Ltd. A.S.A.P.
This Report and all associated materials remain the sole property of Western Inspection Ltd. until such time as they are paid for in full!

WESTERN INSPECTION LTD.
3231 - 58th AVENUE, S.E., CALGARY
ALBERTA T2C 0B4
TEL: (403) 279-4540
FAX: (403) 236-3043

RADIOGRAPHIC EXAMINATION REPORT #CGY-336484

Platinum Energy Services Corp.
#750, 333 - 11th Avenue SW
Calgary, AB T2R 1L9
Tel: (403) 543-3760 Fax: (403) 543-3765

Job Number: MS-18378
PO Number: N1230785

Date of Exam: Sunday, Jun 14 2009
Job Location: Western's Shop
Technicians: Clark Mitchell SNT Lev. II

Acc Codes: ANSI/ASME B31.3 Sour
Inspected: Pre Heat Treat
Material: Carbon Steel
Isotope: IR 192
Focal Spot: 2x3 mm
Curies: 41
Degree: 100%
Processing: Automatic
Units: in

Legend:

# (Loading)	S = Single
	D = Double
	T = Triple
# (Result)	ACC = Accept
	REJ = Reject
	RETEST = Retest
@ (Degree)	1 = Acceptable
	2 = Slight
	3 = Reject

Note: SFD Does not include reinforcement

Comp#	Test#	Tech	IQI	Wldr	Dia	Thk	Len	Sch	SFD	#	Films	Type	#	@ Discontinuity	From - To
1	X1	RT3	1B	B	6	0.719		160	3.312	S	2	D5-GEV- I	ACC	1 Concavity	
2	X2	RT3	1B	B	6	0.719		160	3.312	S	2	D5-GEV- I	ACC		
3	X3	RT3	1B	B	6	0.719		160	3.312	S	2	D5-GEV- I	REJ3	Crater	9.75 - 10
4	X4	RT3	1B	B	6	0.719		160	3.312	S	2	D5-GEV- I	REJ3	Crater	0.75 - 1
5	X5	RT3	1B	B	6	0.719		160	3.312	S	2	D5-GEV- I	ACC		
6	X6	RT1	1B	J	4	0.531		160	4.5	S	4	D5-GEV-I	ACC		
7	X7	RT1	1B	J	4	0.531		160	4.5	S	4	D5-GEV-I	ACC		
8	X8	RT1	1B	J	4	0.531		160	4.5	S	4	D5-GEV-I	ACC		
9	X9	RT1	1B	J	4	0.531		160	4.5	S	4	D5-GEV-I	ACC		
10	X10	RT1	1B	J	4	0.531		160	4.5	S	4	D5-GEV-I	REJ3	Piping	3.5 - 4
11	X11	RT1	1B	J	4	0.531		160	4.5	S	4	D5-GEV-I	ACC		
12	X12	RT1	1B	J	4	0.531		160	4.5	S	4	D5-GEV-I	ACC		
13	X13	RT1	1B	J	4	0.531		160	4.5	S	4	D5-GEV-I	ACC		
14	X14	RT1	1B	J	4	0.531		160	4.5	S	4	D5-GEV-I	REJ3	Internal Undercut	3.5 - 4.5
15	X15	RT1	1B	J	4	0.531		160	4.5	S	4	D5-GEV-I	ACC		
16	X16	RT1	1B	B	2	0.343		160	2.375	S	4	D4-GEV- I	ACC		
17	X17	RT1	1B	B	2	0.343		160	2.375	S	4	D4-GEV- I	ACC		
18	X18	RT1	1B	B	2	0.343		160	2.375	S	4	D4-GEV- I	ACC		

IMPORTANT: Please Sign And Return the Yellow Copy to Western Inspection Ltd. A.S.A.P.
This Report and all associated materials remain the sole property of Western Inspection Ltd. until such time as they are paid for in full!

WESTERN INSPECTION LTD.
3231 - 58th AVENUE, S.E., CALGARY
ALBERTA T2C 0B4
TEL: (403) 279-4540
FAX: (403) 236-3043

Platinum Energy Services Corp.
#750, 333 - 11th Avenue SW
Calgary, AB T2R 1L9
Tel: (403) 543-3760 Fax: (403) 543-3765

Job Number: MS-18378
PO Number: N1230785

Date of Exam: Sunday, Jun 14 2009
Job Location: Western's Shop
Technicians: Clark Mitchell SNT Lev. II

Acc Codes: ANSI/ASME B31.3 Sour
Inspected: Pre Heat Treat
Material: Carbon Steel
Isotope: IR 192
Focal Spot: 2x3 mm
Curies: 41
Degree: 100%
Processing: Automatic
Units: in

Legend:

\# (Loading) S = Single, D = Double, T = Triple
\# (Result) ACC = Accept, REJ = Reject, RETEST = Retest
@ (Degree) 1 = Acceptable, 2 = Slight, 3 = Reject

Note: SFD Does not include reinforcement

Test Information												Result Information		
Comp#	Test#	Tech	IQI	Wldr	Dia	Thk	Len	Sch	SFD	#	Films	Type	#	@ Discontinuity	From - To
19	X19	RT1	1B	B	2	0.343		160	2.375	S	4	D4-GEV- I	ACC	1 Concavity Mig Wire	
20	X20	RT1	1B	B	2	0.343		160	2.375	S	4	D4-GEV- I	ACC		
21	X21	RT1	1B	B	2	0.343		160	2.375	S	4	D4-GEV- I	REJ3	Crater	5 - 5.25
22	X22	RT1	1B	B	2	0.343		160	2.375	S	4	D4-GEV- I	ACC		
23	X23	RT1	1B	B	2	0.343		160	2.375	S	4	D4-GEV- I	ACC		
24	X24	RT1	1B	B	2	0.218		80	2.375	S	3	D4-GEV- I	ACC		
25	X25	RT1	1B	B	2	0.218		80	2.375	S	3	D4-GEV- I	ACC		
26	X26	RT1	1B	B	2	0.218		80	2.375	S	3	D4-GEV- I	ACC		
27	X27	RT1	1B	B	2	0.218		80	2.375	S	3	D4-GEV- I	ACC		
28	X28	RT1	1B	B	2	0.218		80	2.375	S	3	D4-GEV- I	ACC		
29	X29	RT1	1B	B	2	0.218		80	2.375	S	3	D4-GEV- I	ACC ACC	1 Porosity 1 Slag	
30	X30	RT1	1B	B	2	0.218		80	2.375	S	3	D4-GEV- I	ACC		
31	X31	RT1	1B	B	2	0.218		80	2.375	S	3	D4-GEV- I	ACC		
32	X32	RT1	1B	B	4	0.237		STD	4.5	S	3	D4-GEV- I	ACC		
33	X33	RT1	1B	B	4	0.237		STD	4.5	S	3	D4-GEV- I	REJ3 REJ3	Crater Lack of Fusion	3.25 - 3.75 11.75 - 12
34	X34	RT1	1B	B	4	0.237		STD	4.5	S	3	D4-GEV- I	ACC		

IMPORTANT: Please Sign And Return the Yellow Copy to Western Inspection Ltd. A.S.A.P.
This Report and all associated materials remain the sole property of Western Inspection Ltd. until such time as they are paid for in full!

WESTERN INSPECTION LTD.
3231 - 58th AVENUE, S.E., CALGARY
ALBERTA T2C 0B4
TEL: (403) 279-4540
FAX: (403) 236-3043

Platinum Energy Services Corp.
#750, 333 - 11th Avenue SW
Calgary, AB T2R 1L9
Tel: (403) 543-3760 Fax: (403) 543-3765

Job Number: MS-18378
PO Number: N1230785

Date of Exam: Sunday, Jun 14 2009
Job Location: Western's Shop
Technicians: Clark Mitchell SNT Lev. II

Acc Codes: ANSI/ASME B31.3 Sour
Inspected: Pre Heat Treat
Material: Carbon Steel
Isotope: IR 192
Focal Spot: 2x3 mm
Curies: 41
Degree: 100%
Processing: Automatic
Units: in

Legend:

(Loading) S = Single, D = Double, T = Triple
(Result) ACC = Accept, REJ = Reject, RETEST = Retest
@ (Degree) 1 = Acceptable, 2 = Slight, 3 = Reject

Note: SFD Does not include reinforcement

Test Information												Result Information		
Comp#	Test#	Tech	IQI	Wldr	Dia	Thk	Len	Sch	SFD	#	Films	Type	#	@ Discontinuity	From - To
35	X35	RT1	1B	J	2	0.343		160	2.375	S	4	D4-GEV- I	ACC		
36	X36	RT1	1B	J	2	0.343		160	2.375	S	4	D4-GEV- I	ACC		
37	X37	RT1	1B	J	2	0.343		160	2.375	S	4	D4-GEV- I	ACC		

RT 1: T.291 g) S.O.D., Nominal Wall Thickness Plus Inside Diameter of Pipe T.291 h) S.S.O.F.D., Wall Thickness Plus Allowable Weld Reinforcement (Both Sides).
RT 3: T.291 g) S.O.D., half of the pipe I.D. less 1/2 of max. allowable reinforcement. T.291 h) S.S.O.F.D., nominal wall thickness plus reinforcement.

Units:

Qty	Code
11	2/160/00
8	2/80/00
10	4/160/00
3	4/STD/00
5	6/160/00

Sign Here: _____
Keith Muise CGSB Lev. II, SNT Lev. II

Sign Here: _____
Customer Representative:

IMPORTANT: Please Sign And Return the Yellow Copy to Western Inspection Ltd. A.S.A.P.
This Report and all associated materials remain the sole property of Western Inspection Ltd. until such time as they are paid for in full!

WESTERN INSPECTION LTD.
3231 - 58th AVENUE, S.E., CALGARY
ALBERTA T2C 0B4
TEL: (403) 279-4540
FAX: (403) 236-3043

Platinum Energy Services Corp.
#750, 333 - 11th Avenue SW
Calgary, AB T2R 1L9
Tel: (403) 543-3760Fax: (403) 543-3765

Job Number: MS-18378
PO Number:

Date of Exam: Friday, Jun 19 2009
Job Location: Customer's Shop
Technicians: Philip Lai

Acc Codes: ANSI/ASME B31.3 Normal
Material: Carbon Steel
Surface: As Polished
Inspected: Post Heat Treat
Procedure: HRD-1
Equipment: Krautkramer Micro-Dur 10
Penetrator: Diamond
HT Scale: Vickers
Units: in

	Comp#	Test#	Wldr	Dia.	Sch.	Description	Result Information Locations and Readings
1	SPOOL	X1	B			6" BUTT WELD	PM 165, Haz 173, Weld 186, Haz 165, PM 163
2	SPOOL	X3	B			6" BUTT WELD	PM 150, Haz 175, Weld 180, Haz 167, PM 162
3	SPOOL	X4	B			6" BUTT WELD	PM 156, Haz 167, Weld 188, Haz 167, PM 158
4	SPOOL	X7	J			4" BUTT WELD	PM 152, Haz 161, Weld 179, Haz 166, PM 150
5	SPOOL	X8	J			4" BUTT WELD	PM 151, Haz 154, Weld 174, Haz 157, PM 152

Job Comments:
10%

Charges:

Qty	Units	Type	SubType	Rate	Code
1	Hr(s)	Level II	Chargeable	Regular	NDE/L2/C/A-/00
25	Hit(s)	Equipment Cost	Electronic Hit	N/A	HRD/EQP/ELC/NA/00

Sign Here: _____
Philip Lai

Sign Here: _____
Customer Representative:

IMPORTANT: Please Sign And Return the Yellow Copy to Western Inspection Ltd. A.S.A.P.
This Report and all associated materials remain the sole property of Western Inspection Ltd. until such time as they are paid for in full!

WESTERN INSPECTION LTD.
3231 - 58th AVENUE, S.E., CALGARY
ALBERTA T2C 0B4
TEL: (403) 279-4540
FAX: (403) 236-3043

Platinum Energy Services Corp.
#750, 333 - 11th Avenue SW
Calgary, AB T2R 1L9
Tel: (403) 543-3760Fax: (403) 543-3765

Job Number: MS-18378
PO Number:

Date of Exam: Friday, Jun 19 2009
Job Location: Customer's Shop
Technicians: Philip Lai CGSB Level II, SNT LEVEL II

Acc Codes: ANSI/ASME B31.3 Normal
Inspected: Post Heat Treat
Material: Carbon Steel
Surface: As Welded
Procedure: MPI-1 / Wet Fluorescent
Technique: Yoke
Particle: Green Fluorescent
Equipment: AC Yoke
Lighting: Blacklight
Units: in

Results: ACC = Accept
REJ = Reject
RETEST = Retest

	Comp#	Test#	Wldr	Dia	Sch	Len	Description	Result	Discontinuity	Frm	-	To
1	SPOOL	1					2" WOL	ACC				
2	SPOOL	2					2" WOL	ACC				
3	SPOOL	3					2" WOL	ACC				

Charges:

Qty	Units	Type	SubType	Rate	Code
1	Hr(s)	Level II	Chargeable	Regular	NDE/L2/C/A-/00
1	Hr(s)	Consumables	LPI/MPI Consumables	N/A	NDE/CON/LMC/NA/00

Sign Here: _____
Philip Lai CGSB Level II, SNT LEVEL II

Sign Here: _____
Customer Representative:

IMPORTANT: Please Sign And Return the Yellow Copy to Western Inspection Ltd. A.S.A.P. This Report Supersedes All Previous Copies.(req 2)
This Report and all associated materials remain the sole property of Western Inspection Ltd. until such time as they are paid for in full!

INTEGRATED METALLURGICAL SERVICES LTD.
5110A - 77 Avenue S.E., Calgary, Alberta T2C 2Z2

Phone (403) 279-2666 Fax: 236-3677 e-mail: cpryde@nucleus.com\dolsen@nucleus.com

HEAT TREATING REQUIREMENTS

CUSTOMER : PLATINUM ENERGY SERVICES CORP. **P.O. #:** N-1230786

MATERIAL : SA-333 GR.6\SA-350 LF2\SA-420 WPL6

DESCRIPTION:

4-PCS. PROCESS FABRICATED PIPE SPOOL
JOB #MS-18378, DWG. #18378-ISO-01-A\B,02-A\B

HUSKY ENERGY c\o GAS LIEQUIDS ENG.

JOB NO: MS-18378 **LENGTH:** 12' O\L MAX.

WEIGHT: 1,400# TOTAL **DIA.:** 2"4",6" O\D MAX.

WALL THK: .344" MAX.

PROCEDURE

1. Furnace Temperature shall not exceed: 425 °C on loading.
2. Heat Rate: 150 °C per hour.
3. Holding Temperature: 621 **±10** or **±14** or **+10\-0** °C
4. Holding Time: 60 Minutes Minimum
5. Cooling Rate: 150 °C/Hr. Max. to 425 °C

Issued to FURNACE #: 1 **FURNACE HEAT NUMBER:** 1-09-091

DATE: June 16, 2009 **ISSUED BY:** C. PRYDE

Attn: Collin
Fax #: 236-3677

EXHIBIT14.1 HEAT TREATMENT INSTRUCTIONS PO# N1230786

HEAT TREATMENT INSTRUCTIONS

JOB NO.: MS-18378 CUSTOMER: Husky Energy c/o Gas Liquids Engineering DATE: June 15 /09

COMPONENT DESCRIPTION: Process Piping, 4 spools

DWG. NO. AND LINE NO.	DIAMETER	THICKNESS	MATERIAL	LENGTH	WEIGHT
18378-ISO-01-A+B	6" & 4"	0.719", 0.581" 0.344"	SA 333 Gr 6, SA 350 LF2 SA-420-WPL6	12' (longest)	1000 lbs
18378-ISO-02-A	4", 2"	0.237", 0.218"	SA 333 Gr 6, SA 350 LF2 SA 420 WPL6	5'	200 lbs
18378-ISO-02-B	4", 2"	0.531", 0.344"	SA 333 Gr 6, SA 350 LF2 SA 420 WPL6	4'	200 lbs

TYPE OF HEAT TREATMENT: PRESSURE VESSEL STRESS RELIEF P-No. 1

Temperature to be raised from 800°F (427°C) to 1150°F (621°C) at a maximum rate of 400 °F

(222 °C) per hour. NOTE: THIS VALUE MUST NEVER EXCEED 400°F (222°C) PER HOUR.

[Calculated rate = 400 degrees F/hr. (222 degrees C/hr.) Divided by the maximum metal thickness of the shell or head plate in inches]

Temperature to be held at a minimum of 1150°F (621°C) for 60 minutes.
[Holding time to be determined by Table UCS-56 for Nominal Thickness as specified in UW-40(f)]

Temperature to be lowered from 1150°F (621°C) to 800°F (427°C) at a maximum rate of 500 °F

(278 °C) per hour. NOTE: THIS VALUE MUST NEVER EXCEED 500°F (278°C) PER HOUR.

[Calculated rate = 500 degrees F/hr. (278 degrees C/hr.) Divided by the maximum metal thickness of the shell or head plate in inches]

From 800°F (427°C) items may be cooled in still air.

Additional requirements:

- Job number and description required on heat treatment charts along with the operator's signature & date.
- Reporting of thermocouple attachment method and location, and verification of furnace thermocouple calibration is required.
- A sufficient number of thermocouples shall be located to control and maintain uniform distribution of temperature on all vessels and parts. Thermocouples shall be directly attached to the item or provision shall be made for thermocouple placement at bottom, centre and top of the furnace charge in accordance with the ASME Code.
- During the heating period, there shall not be a greater variation in temperature throughout the portion of the vessel being heated than 250°F (139°C) within any 15 ft. (4.6 m) interval of length. An adequate number of thermocouples must be used to ensure this Code requirement is met. This limitation is also applicable to the temperature variations between the different thicknesses of various vessel components.
- During the holding period, there shall not be a greater difference than 150°F (83°C) between the highest and lowest temperature throughout the portion of the vessel being heat treated, except where the range is further limited by these instructions.
- If Capacitor Discharge welding is used to attach thermocouples an ASME Code Section IX Welding Procedure Specification is required (WPS qualification is not required), and the energy output must be limited to 125 Watt-Seconds. No other welding is permitted on vessels or parts. [0.5 X Capacitance in farads X Voltage^2 = W-Sec.]
- The method of thermocouple removal shall not damage the heat treated item.

Quality Control Inspector Signature: [signature] Date: June 15/09

Thermocouple Attachment Method: CAPACITANCE Location(s): Bottom Beam

Furnace Heat Number: H-09-091

Furnace Operator Signature: [signature] Date: June 16/09

AADCONTROLS LTD.
518 - 10 AVENUE N. E.
CALGARY ALBERTA T2E 0X6 TEL.(403) 277- 5392

CERTIFICATE OF CALIBRATION

DATE: JUNE 10 2009 DUE DATE: SEPT. 10 2009
COMPANY NAME: INTEGRATED METAL. LOCATION OF WORK: CALGARY
LOOP NAME: FURNACE #1 TYPE OF INSTRUMENT: RECORDER
MANUFACTURER OF INSTRUMENT: HONEYWELL
MODEL NO.: Y15305836-06-01-2-000-002-(10)
SERIAL NO.: 0487247001
INSTRUMENT RANGE: 0-1200 °C INPUT TYPE: K
SERVICE REPORT NO.: —
CALIBRATION DEVICE USED: FLUKE: MODEL 725, SER. 7624251
TRACEABLE TO NATIONAL STANDARDS: NIST, NRC

NOTES:

SIGNED FOR AADCONTROLS LTD.:
SIGNED FOR CUSTOMER:

INPUT VALUE	AS FOUND	ERROR	AS LEFT	ERROR AFTER CALIBRATION
50°C	50°C	0	50°C	0
300°C	300°C	0	300°C	0
600°C	600°C	0	600°C	0
900°C	900°C	0	900°C	0
1150°C	1154°C	+4°C	1154°C	+4°C

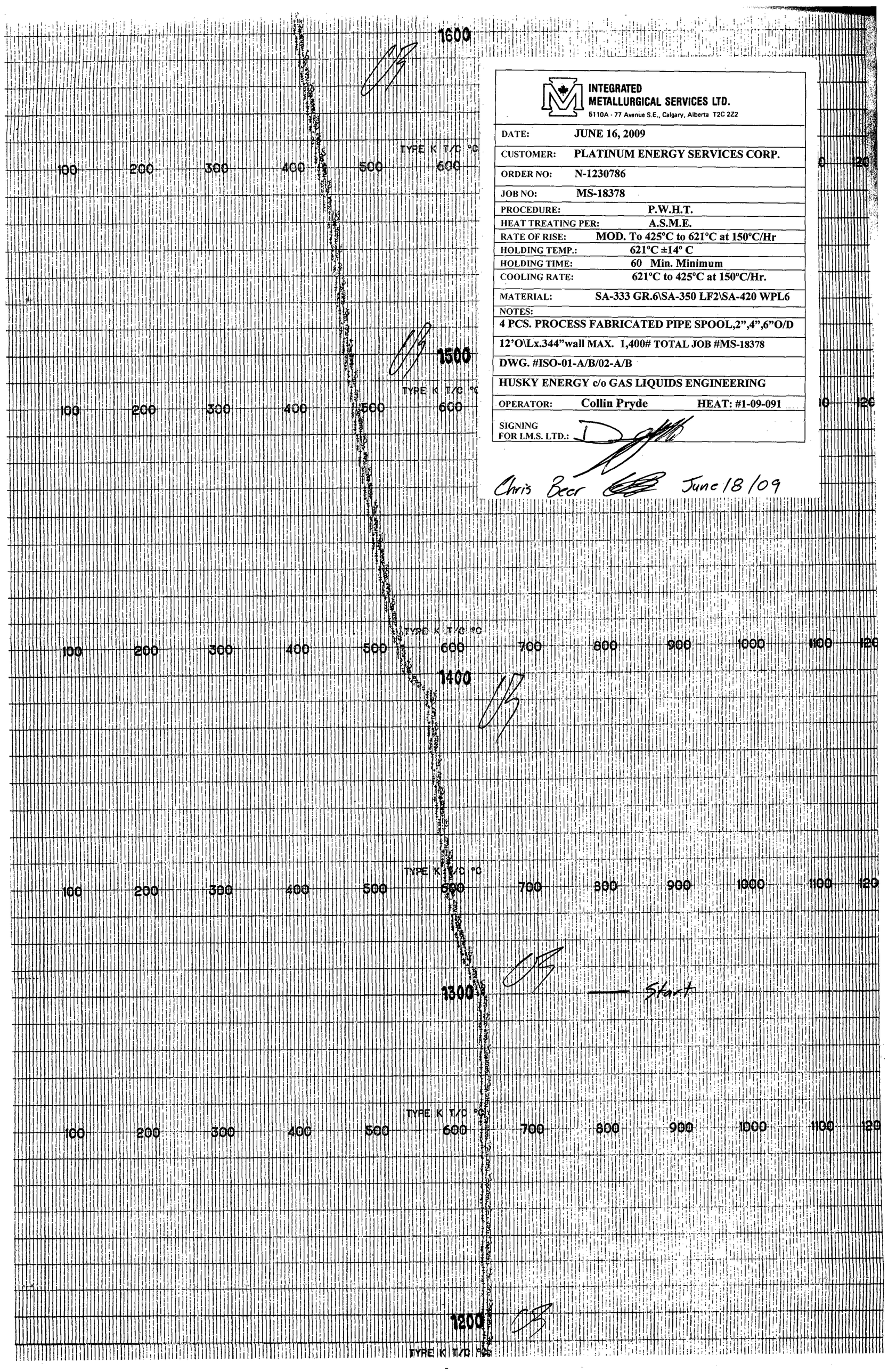

INTEGRATED METALLURGICAL SERVICES LTD.
5110A - 77 Avenue S.E., Calgary, Alberta T2C 2Z2

DATE:	JUNE 16, 2009
CUSTOMER:	PLATINUM ENERGY SERVICES CORP.
ORDER NO:	N-1230786
JOB NO:	MS-18378
PROCEDURE:	P.W.H.T.
HEAT TREATING PER:	A.S.M.E.
RATE OF RISE:	MOD. To 425°C to 621°C at 150°C/Hr
HOLDING TEMP.:	621°C ±14° C
HOLDING TIME:	60 Min. Minimum
COOLING RATE:	621°C to 425°C at 150°C/Hr.
MATERIAL:	SA-333 GR.6\SA-350 LF2\SA-420 WPL6
NOTES:	
4 PCS. PROCESS FABRICATED PIPE SPOOL,2",4",6"O/D	
12'O\Lx.344"wall MAX. 1,400# TOTAL JOB #MS-18378	
DWG. #ISO-01-A/B/02-A/B	
HUSKY ENERGY c/o GAS LIQUIDS ENGINEERING	
OPERATOR:	Collin Pryde HEAT: #1-09-091
SIGNING FOR I.M.S. LTD.:	

Chris Beer June 18/09

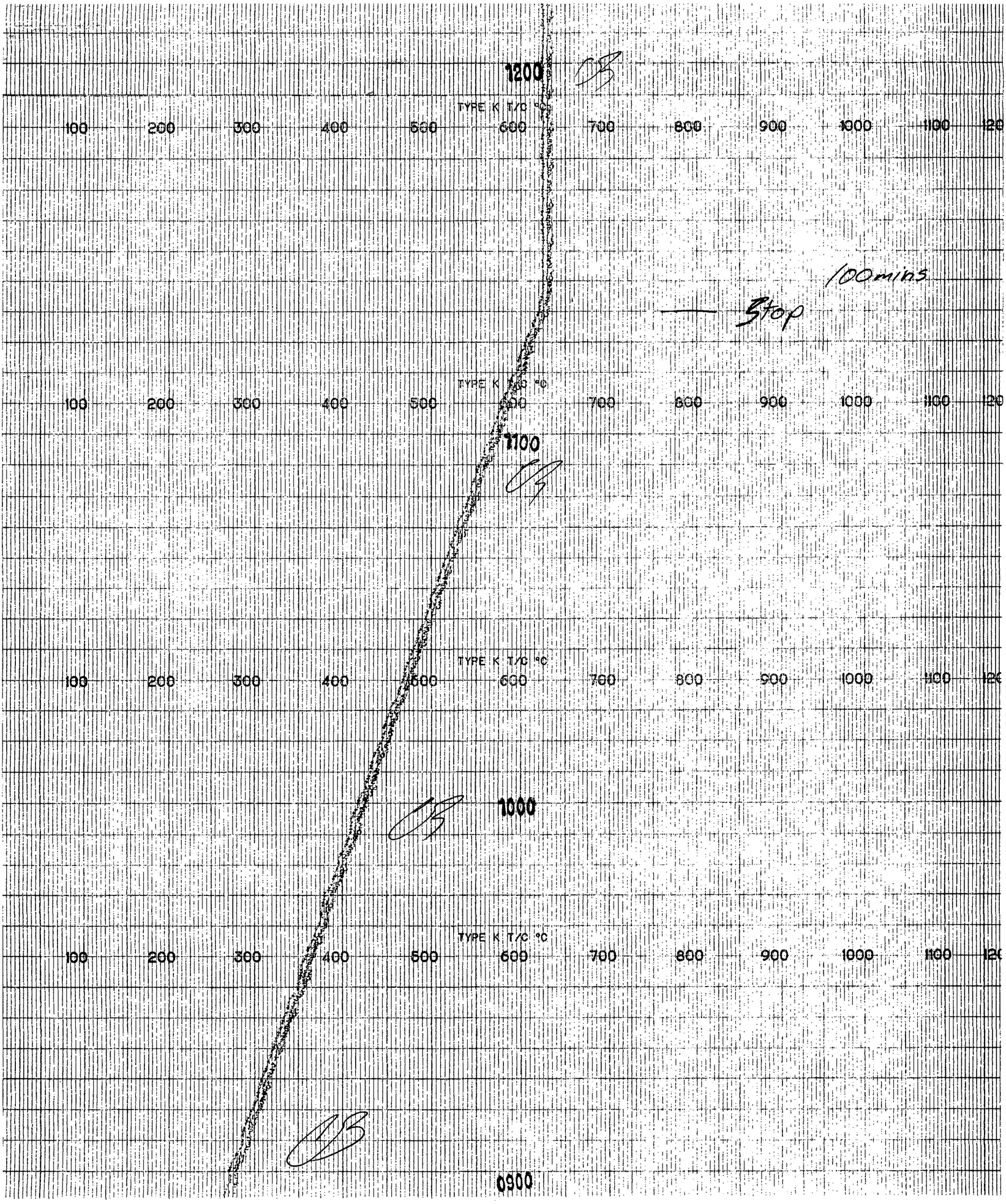
TYPE K T/C °C
100
200
300
400
500
600
700
800
900
1000
1100
1200
1100
1000
0900
100mins
Stop

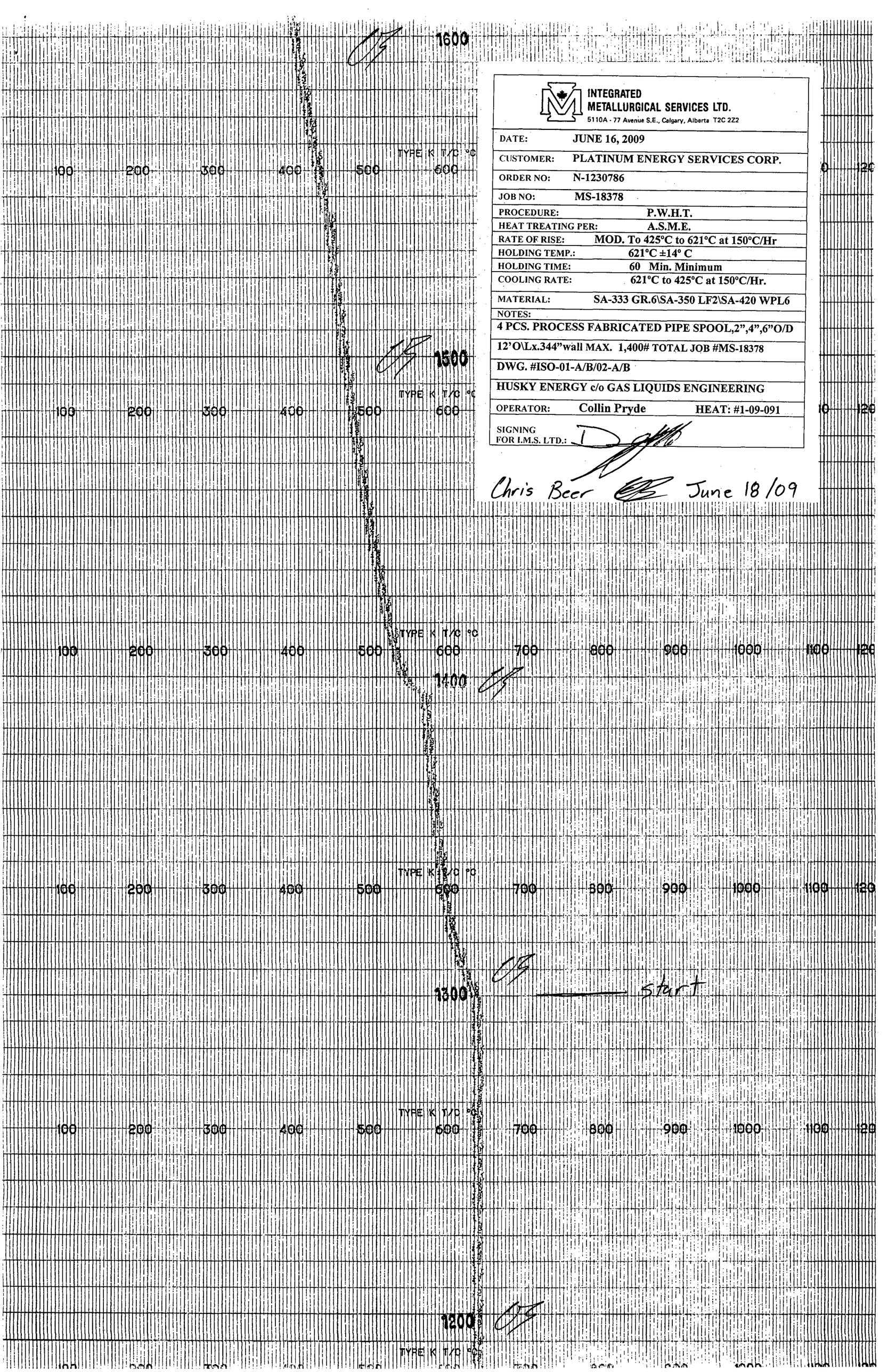

INTEGRATED METALLURGICAL SERVICES LTD.
5110A - 77 Avenue S.E., Calgary, Alberta T2C 2Z2

DATE:	JUNE 16, 2009
CUSTOMER:	PLATINUM ENERGY SERVICES CORP.
ORDER NO:	N-1230786
JOB NO:	MS-18378
PROCEDURE:	P.W.H.T.
HEAT TREATING PER:	A.S.M.E.
RATE OF RISE:	MOD. To 425°C to 621°C at 150°C/Hr
HOLDING TEMP.:	621°C ±14° C
HOLDING TIME:	60 Min. Minimum
COOLING RATE:	621°C to 425°C at 150°C/Hr.
MATERIAL:	SA-333 GR.6\SA-350 LF2\SA-420 WPL6
NOTES:	
4 PCS. PROCESS FABRICATED PIPE SPOOL,2",4",6"O/D	
12'O\Lx.344"wall MAX. 1,400# TOTAL JOB #MS-18378	
DWG. #ISO-01-A/B/02-A/B	
HUSKY ENERGY c/o GAS LIQUIDS ENGINEERING	
OPERATOR:	Collin Pryde HEAT: #1-09-091
SIGNING FOR I.M.S. LTD.:	

Chris Beer June 18/09

Start

Stop

100 mins

1300

1200

1100

1000

900

TYPE K T/C °C

0 100 200 300 400 500 600 700 800 900 1000 1100 1200

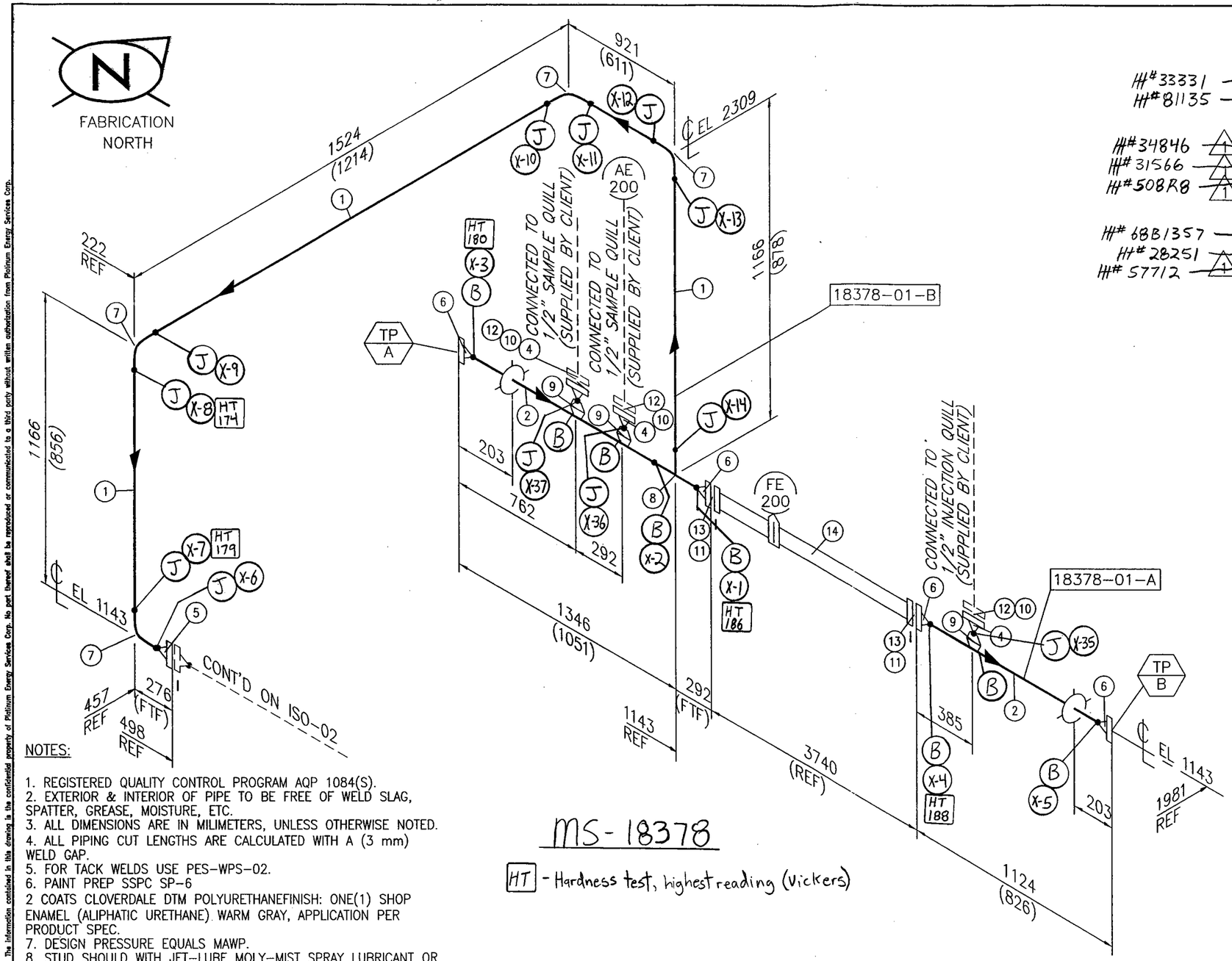

NOTES:

1. REGISTERED QUALITY CONTROL PROGRAM AQP 1084(S).
2. EXTERIOR & INTERIOR OF PIPE TO BE FREE OF WELD SLAG, SPATTER, GREASE, MOISTURE, ETC.
3. ALL DIMENSIONS ARE IN MILIMETERS, UNLESS OTHERWISE NOTED.
4. ALL PIPING CUT LENGTHS ARE CALCULATED WITH A (3 mm) WELD GAP.
5. FOR TACK WELDS USE PES-WPS-02.
6. PAINT PREP SSPC SP-6
2 COATS CLOVERDALE DTM POLYURETHANEFINISH: ONE(1) SHOP ENAMEL (ALIPHATIC URETHANE) WARM GRAY, APPLICATION PER PRODUCT SPEC.
7. DESIGN PRESSURE EQUALS MAWP.
8. STUD SHOULD WITH JET-LUBE MOLY-MIST SPRAY LUBRICANT OR EQUAL.

MS-18378

HT - Hardness test, highest reading (Vickers)

BILL OF MATERIAL

PIPE

MK	QTY	SIZE	SCHEDULE	DESCRIPTION	MATERIAL	S/F
1	4m	4"	160	PIPE SMLS	SA-333-Gr.6	S
2	2m	6"	160	PIPE SMLS	SA-333-Gr.6	S

FLANGES

MK	QTY	SIZE	RATING	SCHEDULE	DESCRIPTION	MATERIAL	S/F
4	3	2"	900#	160	FLANGE RF WN	SA-350 LF2 CL1	S
5	1	4"	900#	160	FLANGE RF WN	SA-350 LF2 CL1	S
6	4	6"	900#	160	FLANGE RF WN	SA-350 LF2 CL1	S

WELD FITTINGS

MK	QTY	SIZE	SCHEDULE	DESCRIPTION	MATERIAL	S/F
7	4	4"	160	ELBOW 90 DEG LR BW	SA-420-WPL6	S
8	1	6" X 4"	160	REDUCING TEE BW	SA-420-WPL6	S
9	3	2" ON 6"	160	WELDOLET	SA-350 LF2 CL1	S

GASKETS'

MK	QTY	SIZE	RATING	DESCRIPTION	MATERIAL	S/F
10	3	2"	900#	RF 1/8" FLEXITALLIC FLEXICARB	316 SS	F
11	2	6"	900#	RF 1/8" FLEXITALLIC FLEXICARB	316 SS	F

BOLTS (SEE NOTE 8)

MK	QTY	SIZE	DESCRIPTION	MATERIAL	S/F
12	3 SETS	7/8" X 5 3/4"	STUD BOLTS CW/2 NUTS-8/SET	SA-193-B7M/SA-194-2HM	F
13	2 SETS	1 1/8" X 7 1/2"	STUD BOLTS CW/2 NUTS-12/SET	SA-193-B7M/SA-194-2HM	F

SUPPORTS & MISC

MK	QTY	SIZE	DESCRIPTION	MATERIAL	S/F
14	1	6"	SENIOR METER RUN (SUPPLIED BY OTHERS)		F

H# 33331
H# 81135
H# 34846
H# 31566
H# 508R8
H# 68B1357
H# 28251
H# 57712

QUALITY CONTROL

APPROVED FOR CONSTRUCTION
DATE: JUN 04 2009
SIGNED:
REVISED
DESTROY ALL PREVIOUS COPIES

REFERENCE DRAWINGS	REV.	REVISION DESCRIPTION	DATE	BY	CHK'D	APP'D
--	--	2 REVISED DESIGN DATA	09/06/04	SW	SW	RWS
--	--	1 REVISED ITEMS 4,5,6,9 TO LOW-TEMP. MATERIAL	09/06/03	SW	SW	RWS
--	--	0 ISSUED FOR CONSTRUCTION	09/05/28	SW	SW	RWS

LINE NUMBER: GAS INLET
SPEC: DSH
FLUID SERVICE: NORMAL FLUID SERVICE

DESIGN DATA			
PIPE CODE	ASME B31.3 (LATEST EDITION & ADDENDA)	WPS	PES-WPS-02/04
DES. PRESS.	14,890 kPa (2,159 PSI)	CA	0.1182" (3mm)
DES. TEMP.	50°C (122°F)	SANDBLAST	SSPC-SP-6
MDMT	-29°C (-20°F)	PRIME	SEE NOTES 6
TEST PRESS.	22,335 kPa (3,238 PSI)	PAINT	SEE NOTES 6
RADIOGRAPHY	100%	INSUL	NO
PWHT	YES	IMPACT TEST 10%	HEAT TRACE NO

PLATINUM Energy Services Corp.

DRAWN BY	SW	09/05/28
CHK'D BY	SW	09/05/28
APP'D BY	RWS	09/05/28

CLIENT: HUSKY ENERGY C/O GAS LIQUIDS ENGINEERING LTD.
PROJECT: B-49-C/93-P-2 WOLVERINE DEVELOPMENT PROJECT
FROM: SKID EDGE (TP-A)
TO: SKID EDGE (TP-B) & ISO-02

JOB NO	DWG. NO.	SHT	REV.
18378	18378-ISO-01	1 OF 1	2

The information contained in this drawing is the confidential property of Platinum Energy Services Corp. No part thereof shall be reproduced or communicated to a third party without written authorization from Platinum Energy Services Corp.

MS-18378

*All welds done by (B)

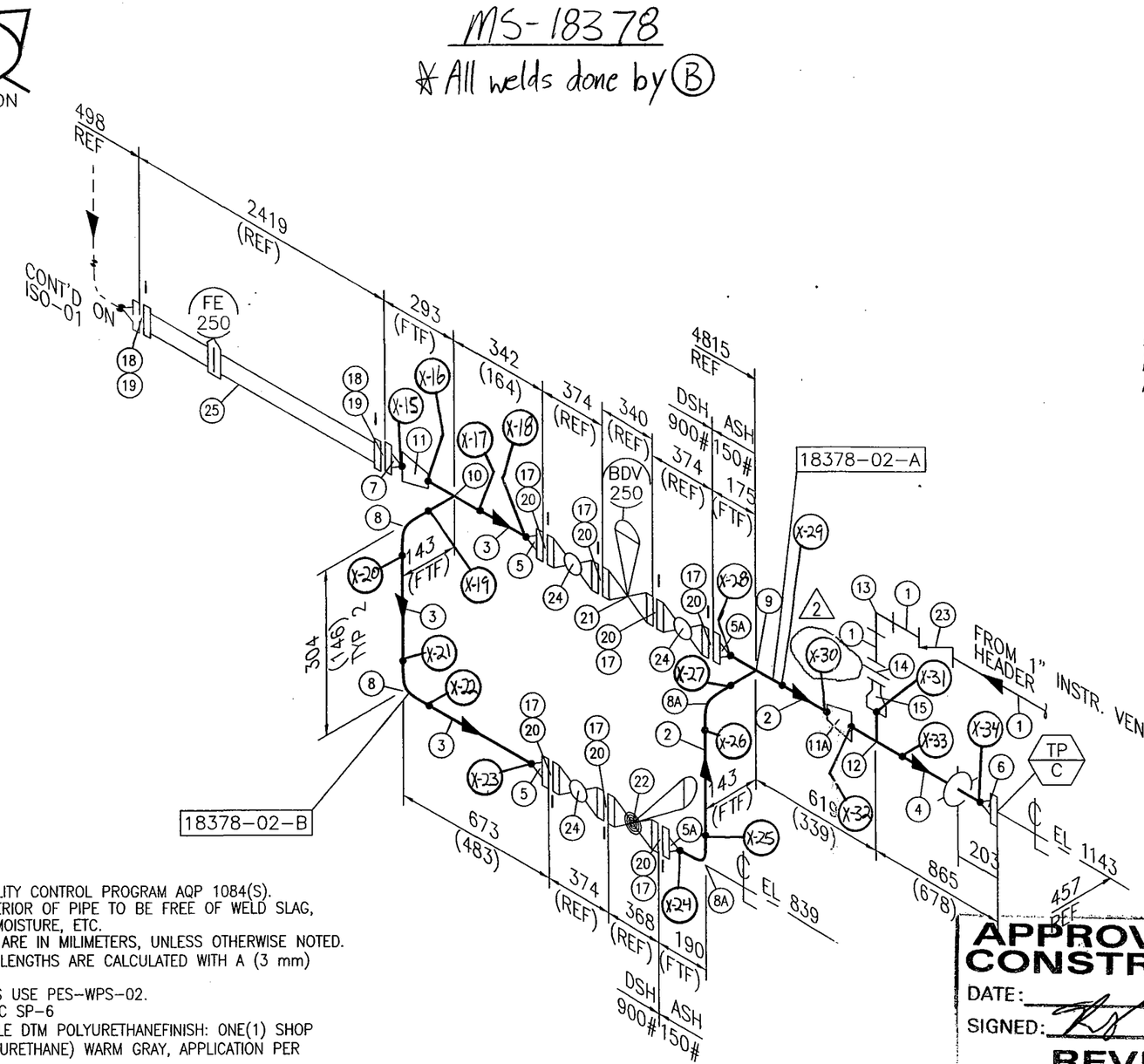

NOTES:

1. REGISTERED QUALITY CONTROL PROGRAM AQP 1084(S).
2. EXTERIOR & INTERIOR OF PIPE TO BE FREE OF WELD SLAG, SPATTER, GREASE, MOISTURE, ETC.
3. ALL DIMENSIONS ARE IN MILIMETERS, UNLESS OTHERWISE NOTED.
4. ALL PIPING CUT LENGTHS ARE CALCULATED WITH A (3 mm) WELD GAP.
5. FOR TACK WELDS USE PES-WPS-02.
6. PAINT PREP SSPC SP-6
2 COATS CLOVERDALE DTM POLYURETHANEFINISH: ONE(1) SHOP ENAMEL (ALIPHATIC URETHANE) WARM GRAY, APPLICATION PER PRODUCT SPEC.
7. DESIGN PRESSURE EQUALS MAWP.
8. STUD SHOULD WITH JET-LUBE MOLY-MIST SPRAY LUBRICANT OR EQUAL.

APPROVED FOR CONSTRUCTION
DATE: JUN 04 2009
SIGNED:
REVISED
DESTROY ALL PREVIOUS COPIES

BILL OF MATERIAL

PIPE

MK	QTY	SIZE	SCHEDULE	DESCRIPTION	MATERIAL	S/F
1	10m	1"	80	PIPE SMLS	SA-106-B	F
2	1m	2"	80	PIPE SMLS	SA-106-B	S
3	1m	2"	160	PIPE SMLS	SA-333-6	S
4	1m	4"	STD	PIPE SMLS	SA-106-B	S

Ht# 588100578
Ht# 5620
Ht# 742179 (1)
Ht# 761745

FLANGES

MK	QTY	SIZE	RATING	SCHEDULE	DESCRIPTION	MATERIAL	S/F
5	2	2"	900#	160	FLANGE RF WN	SA-350 LF2 CL1	S
5A	2	2"	900#	80	FLANGE RF WN	SA-105N	S
6	1	4"	150#	STD.	FLANGE RF WN	SA-105N	S
7	1	4"	900#	160	FLANGE RF WN	SA-350 LF2 CL1	S

Ht# 34846 (1)
Ht# 74330
Ht# 76172 (1)
Ht# 31565

WELD FITTINGS

MK	QTY	SIZE	SCHEDULE	DESCRIPTION	MATERIAL	S/F
8	2	2"	160	ELBOW 90 DEG LR BW	SA-420-WPL6	S
8A	2	2"	80	ELBOW 90 DEG LR BW	SA-234-WPB	S
9	1	2" X 2"	80	STRAIGHT TEE BW	SA-234-WPB	S
10	1	2" X 2"	160	STRAIGHT TEE BW	SA-420-WPL6	S
11	1	4" X 2"	160	CONC REDUCER BW	SA-420-WPL6	S
11A	1	4" X 2"	STD X 80	CONC REDUCER BW	SA-234-WPB	S
12	1	4" X 2"	STD X 80	REDUCING TEE BW	SA-234-WPB	S

Ht# 6815633 (1)
Ht# 09A00043
Ht# 8E2870
Ht# 7K1433 (1)
Ht# 7H4978
Ht# 2315
Ht# 51810110

SCREWED & SOCKET WELD FITTINGS

MK	QTY	SIZE	RATING	DESCRIPTION	MATERIAL	S/F
13	1	1"	3000#	ELBOW 90 DEG SCREWED	SA-105	F
14	1	1"	3000#	UNION	SA-105	-
15	1	2" X 1"	80 X 160	CONCENTRIC SWAGE - BLE/TSE	SA-234-WPB	S

Ht# K1663

GASKETS

MK	QTY	SIZE	RATING	DESCRIPTION	MATERIAL	S/F
17	7	2"	900#	RF 1/8" FLEXITALLIC FLEXICARB	316 SS	F
18	2	4"	900#	RF 1/8" FLEXITALLIC FLEXICARB	316 SS	F

BOLTS (SEE NOTE 8)

MK	QTY	SIZE	DESCRIPTION	MATERIAL	S/F
19	2 SETS	1 1/8" X 6 3/4"	STUD BOLTS CW/2 NUTS-8/SET	SA-193-B7M/SA-194-2HM	F
20	7 SETS	7/8" X 5 3/4"	STUD BOLTS CW/2 NUTS-8/SET	SA-193-B7M/SA-194-2HM	F

VALVES

MK	QTY	SIZE	RATING	DESCRIPTION	MATERIAL	VALVE TAG	S/F
21	1	2"	900#	CONTROL VALVE - FISHER D4			F
22	1	2"	900#	GLOBE VALVE RF (D.S.I.) (2)			F
23	1	1"	900#	CHECK VALVE (WHEATLEY 820)	-	-	-
24	3	2"	900#	BALL VALVE RED PORT RF			F

SUPPORTS & MISC

MK	QTY	SIZE	DESCRIPTION	MATERIAL	S/F
25	1	4"	SENIOR METER RUN (SUPPLIED BY OTHERS)		F

QUALITY CONTROL

(2)

SPEC	ASH	DSH
DES. PRESS.	1,920 kPa (278 PSI)	14,890 kPa (2,159 PSI)
DES. TEMP.	50°C (122°F)	50°C (122°F)
TEST PRESS.	2,880 kPa (417 PSI)	22,335 kPa (3,238 PSI)
MDMT	-29°C (-20°F)	-29°C (-20°F)

LINE NUMBER	BLOW DOWN TO FLARE	SPEC	DSH/ASH	FLUID SERVICE	NORMAL FLUID SERVICE

REFERENCE DRAWINGS	REV.	REVISION DESCRIPTION	DATE	BY	CHK'D	APP'D
--	2	REVISED DESIGN DATA	09/06/04	SW	SW	RWS
--	1	REVISED ITEM 3,5,7,8,10 TO LOW-TEMP MATERIAL	09/06/03	SW	SW	RWS
--	0	ISSUED FOR CONSTRUCTION	09/05/28	SW	SW	RWS

DESIGN DATA			
PIPE CODE	ASME B31.3 (LATEST EDITION & ADDENDA)	WPS	PES-WPS-02/04
DES. PRESS.	SEE CHART	CA	0.1182" (3mm)
DES. TEMP.	SEE CHART	SANDBLAST	SSPC-SP-6
MDMT	SEE CHART	PRIME	SEE NOTES 6
TEST PRESS.	SEE CHART	PAINT	SEE NOTES 6
RADIOGRAPHY	100%	INSUL	NO
PWHT	YES	IMPACT TEST 10%	HEAT TRACE NO

PLATINUM Energy Services Corp.

DRAWN BY	SW	09/05/28
CHK'D BY	SW	09/05/28
APP'D BY	RWS	09/05/28

CLIENT: HUSKY ENERGY C/O GAS LIQUIDS ENGINEERING LTD.
PROJECT: B-49-C/93-P-2 WOLVERINE DEVELOPMENT PROJECT
FROM: ISO-01
TO: SKID EDGE (TP-C)

JOB NO	DWG. NO.	SHT	REV.
18378	18378-ISO-02	1 OF 1	2

The information contained in this drawing is the confidential property of Platinum Energy Services Corp. No part thereof shall be reproduced or communicated to a third party without written authorization from Platinum Energy Services Corp.

18378

OK

INSPECTION CERTIFICATE

RIGID INDUSTRIES CO., LTD.

8, MEI-CHUNG RD. NIAO-SONG,
KAOHSIUNG HSIEN, 83301 TAIWAN
TEL: 886-77310527~8
FAX: 886-77315887

PURCHASER : SEYBOLD
STANDARD : ASTM A234 WPB-07
ASME SA234 WPB-04

MATERIALS : ASTM A106 Gr.B (SEAMLESS PIPE)
INSP. SPEC. : ASME B16.9 - 03

DATE: 2008 - 10 - 09
ORDER NO: 8378/CI08461
P.I. NO: 8H05-1
CERTIFI. NO: 491

ACCORDING TO EN10204/DIN50049/3.1

ITEM NO.	PRODUCT & SIZE			QUANTITY PCS	MFG NO.	VISUAL & DIMENTIONAL INSPECTION	HARDNESS MAX. 197 HB	HEAT TREATMENT (NOTE)	MAGNETIC PARTICLE EXAMINATION	IMPACT TEST (J)
15	ECC-RED	6X5"	XH		8F1340	GOOD	136 - 141	N		
16	TEE	1"	XH		7J2685 (7J)	GOOD	131 - 135	N	GOOD	
17	TEE	1.1/4"	XH		5L3731 (5L)	GOOD	170 - 172	N	GOOD	
18	TEE	2"	XH		8E2870	GOOD	140 - 157	N	GOOD	
19	TEE	2.1/2"	STD		8E3685	GOOD	132 - 134	N	GOOD	
20	RED-TEE	1.1/4X1"	STD		5L3482 (5L)	GOOD	150 - 167	N	GOOD	
21	RED-TEE	2X1.1/4"	XH		FX028	GOOD	130 - 132	N	GOOD	
22	RED-TEE	3X1.1/4"	STD		7A0735	GOOD	137 - 147	N	GOOD	
23	RED-TEE	3X1.1/2"	STD		8D0770	GOOD	162 - 169	N	GOOD	

ITEM NO.	MATERIAL CHARGE NO.		CHEMICAL COMPOSITION %											PHYSICAL TEST			
			C x100	Si x100	Mn x100	P x1000	S x1000	Cu x100	Ni x100	Cr x100	Mo x100	V x100	Nb x1000	Y S KSI	T S KSI	E %	C.E. X100
	STANDARD	MIN.		10	29									35.0	60.0		
		MAX.	30		135	50	58	40	40	40	15	8	20		95.0		50
15	325240		14	25	93	7	4	3	12	2	1	<1	<1	46.3	67.2	41.0	31
16	0722685		16	29	66	13	9	10	4	3	2	1	<1	46.4	71.8	42.0	29
17	M19731		14	25	94	15	4	1	1	2	<1	<1	1	60.1	74.2	57.0	30
18	0713470		15	22	66	8	8	10	4	2	2	1	<1	45.7	70.4	35.0	27
19	D0745185		20	24	61	10	9	9	4	6	1	1	<1	48.6	72.6	33.5	32
20	J5L3682		11	22	134	6	5	3	2	12	1	<1	<1	48.9	69.3	56.0	36
21	24461		21	25	49	14	1	1	2	3	<1	<1	<1	49.0	70.0	51.7	29
22	J6LA335		11	26	133	11	4	3	3	11	<1	<1	1	49.2	69.9	62.0	35
23	0713470		15	22	66	8	8	10	4	2	2	1	<1	45.7	70.4	31.5	27

(NOTE): A: HOT FORMED WITH FINAL TEMPERATURE BETWEEN 620℃-980℃,AIR COOLING.
N: NORMALIZING AT TEMPERATURE 880℃X0.5HR,AIR COOLING.
NACE MR-01-75-03/ISO15156.2 & NACE MR 0103-03 : SATISFACTORY

WE HEREBY CERTIFY THAT THE PRODUCT DESCRIBED HEREIN HAS BEEN MANUFACTURED IN ACCORDANCE WITH THE SPECIFICATIONS CONCERNED AND ALSO WITH THE PURCHASER'S REQUIREMENTS AND THAT THE TEST RESULTS SHOWN HEREIN ARE CORRECT.

Ou L Lan
MANAGER OF Q.A. DEPT.

CONFORMS TO ASME SEC II PART A
2007 EDITION 2008 ADDENDA
SIGNED
DATE June 2/09

CE# 0.279355Y

2" XH BW TEES A234-WPB

HEAT NUMBER : 8E2870
TRANS AM PIPING PRODUCTS - REV'D BY:
Shipment/Seq #: S 8 - 1461 101

18378

HEAT NUMBER : 09A00043
TRANS AM PIPING PRODUCTS - REV'D BY:
Shipment/Seq #: S 9 - 1173 19

2" XH LR 90 BW ELLS A234-WPB

Purchaser : TRANS-AM PIPING PRODUCTS LTD.

INSPECTION CERTIFICATE

TO EN10204 3.1

Thai Benkan Co., Ltd.
58 Soi Watkrunai, Bangkru, Prapadaeng,
Samutprakarn, 10130 Thailand.

E-No.	Purchase Order No.	Job No.	D M Y	Certificate No.
MB-443	CI-08-363		24/03/2009	T- 2009180025

No.		MFG. No. (Heat Identification No.)	Specification for Material Made from Seamless Pipe ASTM A234-07/ASME SA234-07 Gr.WPB CSA Z245.11 Gr.241 CAT I NACE MR0175/ISO 15156 : 2003	Specification for Inspection ASME B16.9-2007		Visual Examination Good	Dimensional Inspec Good
			Product & Size (T:*1)	Quantity	Heat Treatment (Note 1)	Hardness Actual Data	
1		08N20123	RC WPB 6 X 5 S40		N	HB : 130 - 145	
2		08K20115	RE WPB 10 X 8 S40		N	HB : 120 - 135	
3		09A00006	90 EL WPB 2 S80		A	HB : 130 - 160	
4		09A00043	90 EL WPB 2 S80		A	HB : 130 - 160	
5		09B00003	180 EL WPB 8 S80		A	HB : 132 - 148	

Specification		Chemical Composition %												Tension Test *2			
		C	Si	Mn	P	S	Cu	Ni	Cr	Mo	V	Nb	C.E.	YS	TS	E	
Min.		x 100	x 100	x 100	x 1000	x 1000	x 100	x 100	x 100	x 100	x 1000	x 1000	x 100	MPa.		%	HARDNESS MAX
Max.			10	29										240	415	30	197 HB : GOOD
Material Heat No.		30		106	50	58	40	40	40	15	80	20			655		
1	J8L6758	20	23	80	9	6	1	2	6	1	0	0	35	328	492	41	
2	J8K7803	20	18	85	17	6	4	2	5	1	0	0	36	324	480	44	
3	328747	14	19	101	18	1	3	4	12	2	0	0	34	320	492	37	
4	56080C	17	18	77	14	5	19	13	20	6	0	0	37	323	498	33	
5	J8K7307	19	20	85	14	3	2	2	6	4	0	0	35	282	487	39	

ORIGINAL

(Note 1) A : Hot formed with final temperature between 620 °C-980°C, Air Cooling N : Normalizing 910°Cx0.5 HR. Air Cooling *N : Normalizing 910°Cx0.5 HR. Air Cooling (Specification for material made from plate) S : Stress Relieving 675° Cx0.5 HR. Air C

The fittings was manufactured,sampled,tested,and inspected in accordance with the specification,and was found to meet the requirements

C.E. = C+Mn/6+(Cr+Mo+V)/5+(Ni+Cu)/15 MAGNETIC PARTICLE EXAMINATION (OR TEE ONLY)

We hereby certify that the product described herein has been manufactured in accordance with the specifications concerned and also with the purchaser's requirements and that the test results shown herein are correct.

CONFORMS TO ASME SEC II PART A
2007 EDITION ~~2008~~ ADDENDA
SIGNED
DATE June 2/09

Quality Assurance Manager
Thai Benkan Co., Ltd.

CE# 0.3716687

* 1 : "T" symbolized wall thickness in mm. * 2 : YS Yield strength TS = Tensile strength E = Elongation

Form TZ-6A/2

18378

HEAT NUMBER : K1663
TRANS AM PIPING PRODUCTS - REV'D BY: MB
P.O. # /Seq #: L-09 - 8425 2

2X1 XH/160 CONC SWAGE NIPPLE
A234-WPB BLE/TSE

Current Date: Tue, 26 May 2009 19:50:30 +0000

Material Test Report

Report Number: 19011 Date: Tue, Feb 3rd 2009

Description: 2" SWAGES & BULL PLUGS Heat Treatment: H.R.

Specification: A234-WPB/SA234-WPB Material: C1022

Year of Revision: 2007 CRN: OA7470.5C

Comment: NACE MR0103-2007 / MR0175 / ISO 15156-2/2003

Chemical Analysis

Heat Code: K1663

Heat Number: A085825

C	0.200	Cu	0.270	Al	0.022
Mn	0.900	Ni	0.090	Ti	0.001
P	0.010	Cr	0.120	Pb	0.001
S	0.018	Mo	0.040		0.000
Si	0.300	V	0.004		0.000
N	0.009	Nb	0.002		0.000

Carbon Equivalency Formula Used:
C+(Mn/6)+(Cr+Mo+V)/5+(Ni+Cu)/15
CE= 0.41

Mechanical Tests

Yield PSI: 45300 Tensile PSI: 76000

Elongation: 32 % @ 2" Reduction of Area %: 60

Size: 2.375" RND Brinell Hardness: 149

Charpy Impact Test

Individual Values: (V1) ft/lbs (V2) ft/lbs (V3) ft/lbs

This Material Test Report meets DIN 50 049/EN 10 204 3.1.B Standard 1995

We hereby Certify that the material described has been tested in accordance with the specifications, and the results are correct as contained in the records of the Company.

Ian Shields
Q.A. Manager and Customer Service

KEDDCO

Sarnia
Toll Free: 1-866-511-1381
By regular telephone at: 519-336-2960
By fax at 519-344-3181
Mailing Address: PO Box 999, 645 Keddco St. Sarnia, ON N7T 7K6

Edmonton
Toll Free: 1-800-661-3809
By regular telephone at: 780-438-4944
By fax at 780-435-3917
Mailing Address: 4120 - 78 Av. Edmonton, AB T6B 3M8

CONFORMS TO ASME SEC II PART A
2007 EDITION 2008 ADDENDA
SIGNED
DATE June 2/09

CE# 0.4068

Benteler Stahl/Rohr GmbH
Postfach 13 40
33043 Paderborn
Deutschland
Tel.: +49.5254.81-0 Fax: +49.5254.13666

BENTELER
Stahl/Rohr

ABNAHMEPRÜFZEUGNIS EN 10204-3.1
INSPECTION CERTIFICATE EN 10204-3.1
CERTIFICAT DE RECEPTION EN 10204-3.1

Dokument-Nr.: **Document No.:** No. du document: 65-322054/001/P

Prüf-Nr.: **Inspection No.:** No. du certificat:

Schmelzenanalyse [%] / **Heat analysis [%]** / Analyse sur coulée [%]

Pos. Item Poste	Schmelzen-Nr. Heat No. No. de coulée	C	SI	MN	P	S	CR	MO	NI	CU	V	NB	TI	B
0005	742270	0,130	0,190	0,81	0,007	0,005	0,08	0,02	0,09	0,12	0,001	0,010	0,003	0,0001
0006	742252	0,130	0,195	0,81	0,008	0,004	0,10	0,03	0,09	0,14	0,001	0,010	0,003	0,0001
0007	742251	0,125	0,190	0,82	0,008	0,005	0,12	0,04	0,07	0,12	0,001	0,010	0,002	0,0001
0008	742284	0,125	0,205	0,84	0,008	0,004	0,14	0,05	0,14	0,16	0,001	0,010	0,003	0,0001
0009	742179	0,135	0,225	0,82	0,009	0,005	0,19	0,04	0,17	0,22	0,001	0,010	0,003	0,0001
0010	533054	0,140	0,240	0,82	0,008	0,003	0,19	0,04	0,16	0,22	0,001	0,010	0,003	0,0001
0012	742241	0,130	0,203	0,81	0,007	0,004	0,11	0,02	0,11	0,15	0,001	0,010	0,003	0,0001
0013	742168	0,135	0,225	0,82	0,009	0,005	0,19	0,04	0,17	0,22	0,001	0,010	0,003	0,0001
0014	742349	0,110	0,357	1,24	0,009	0,003	0,17	0,07	0,17	0,13	0,065	0,032	0,004	0,0002
0015	533278	0,100	0,340	1,24	0,009	0,003	0,16	0,07	0,16	0,11	0,065	0,031	0,003	0,0002
0018	533108	0,110	0,350	1,25	0,009	0,002	0,17	0,07	0,17	0,15	0,065	0,033	0,003	0,0003
0020	533011	0,120	0,380	1,24	0,011	0,002	0,18	0,08	0,17	0,15	0,067	0,032	0,003	0,0002
0024	533011	0,120	0,380	1,24	0,011	0,002	0,18	0,08	0,17	0,15	0,067	0,032	0,003	0,0002
0025	533011	0,120	0,380	1,24	0,011	0,002	0,18	0,08	0,17	0,15	0,067	0,032	0,003	0,0002

1. Formel: CE IIW=C+(Mn/6)+((Cr+Mo+V)/5)+((Cu+Ni)/15)<=0,42 %
2. Formel: CEV=C+F*((Mn/6)+(Si/24)+(Cu/15)+(Ni/20)+((Cr+Mo+V+Nb)/5) +(5*B)) <=0,40
3. Formel: Mn/C>=3/1
4. Formel: Cr+Cu+Mo+Ni+V<=1,00 %

Formelergebnisse / **Formula results** / Résultats des formules

Pos. Item Poste	Schmelzen-Nr Heat No. No. de coulée	1. Formel 1. Formula 1. Formule	2. Formel 2. Formula 2. Formule	3. Formel 3. Formula 3. Formule	4. Formel 4. Formula 4. Formule
0005	742270	0,299	0,272	6,231	0,311
0006	742252	0,307	0,279	6,231	0,361
0007	742251	0,307	0,278	6,560	0,351
0008	742284	0,323	0,291	6,720	0,491

Benteler Stahl/Rohr GmbH
Postfach 13 40
33043 Paderborn
Deutschland
Tel.: +49.5254.81-0 Fax: +49.5254.13686

BENTELER
Stahl/Rohr

ABNAHMEPRÜFZEUGNIS EN 10204-3.1
INSPECTION CERTIFICATE EN 10204-3.1
CERTIFICAT DE RECEPTION EN 10204-3.1

Dokument-Nr.: 65-322054/001/P
Document No.:
No. du document:

Prüf-Nr.:
Inspection No.:
No. du certificat:

Blatt: 4 / 18
Page:
Page:

Formelergebnisse / Formula results / Résultats des formules

Pos. / Item / Poste	Schmelzen-Nr / Heat No. / No. de coulée	1. Formel / 1. Formula / 1. Formule	2. Formel / 2. Formula / 2. Formule	3. Formel / 3. Formula / 3. Formule	4. Formel / 4. Formula / 4. Formule
0009	742179	0,344	0,320	6,074	0,621
0010	533054	0,348	0,325	5,857	0,611
0012	742241	0,309	0,280	6,231	0,391
0013	742168	0,344	0,320	6,074	0,621
0014	742349	0,398	0,325	11,273	0,605
0015	533278	0,384	0,300	12,400	0,565
0018	533108	0,401	0,327	11,364	0,625
0020	533011	0,413	0,355	10,333	0,647
0024	533011	0,413	0,355	10,333	0,647
0025	533011	0,413	0,355	10,333	0,647

CONFORMS TO ASME SEC II PART A
20 07 EDITION 20 — ADDENDA
SIGNED
DATE 12-24-08

Produktanalyse [%] / Product analysis [%] / Analyse sur produit [%]

Pos. / Item / Poste	Schmelzen-Nr. / Heat No. / No. de coulée	C	SI	MN	P	S	CR	MO	NI	CU	V	NB	TI	B
													EE3438.	
0005	742270	0,130	0,170	0,78	0,008	0,004	0,07	0,02	0,07	0,10	0,001	0,010	0,002	0,0002
0006	742252	0,140	0,190	0,85	0,009	0,006	0,11	0,02	0,10	0,15	0,002	0,010	0,003	0,0002
0007	742251	0,140	0,190	0,84	0,008	0,005	0,11	0,02	0,10	0,16	0,001	0,010	0,003	0,0001
0008	742284	0,140	0,170	0,81	0,009	0,004	0,14	0,05	0,16	0,15	0,001	0,010	0,002	0,0001
0009	742179	0,140	0,210	0,81	0,009	0,003	0,20	0,05	0,16	0,19	0,002	0,010	0,002	0,0002
0010	533054	0,140	0,210	0,83	0,008	0,002	0,19	0,05	0,16	0,21	0,001	0,010	0,002	0,0003
0012	742241	0,140	0,190	0,84	0,008	0,005	0,11	0,02	0,10	0,16	0,001	0,010	0,003	0,0001
0013	742168	0,140	0,220	0,81	0,009	0,002	0,20	0,05	0,16	0,20	0,001	0,010	0,002	0,0003
0014	742349	0,110	0,340	1,24	0,008	0,003	0,18	0,06	0,17	0,13	0,067	0,038	0,003	0,0006
0015	533278	0,110	0,320	1,27	0,010	0,003	0,17	0,07	0,17	0,12	0,070	0,037	0,003	0,0007
0018	533108	0,110	0,320	1,22	0,009	0,002	0,17	0,07	0,18	0,15	0,068	0,038	0,003	0,0005
0020	533011	0,120	0,360	1,25	0,010	0,001	0,19	0,08	0,17	0,13	0,071	0,039	0,003	0,0004

Benteler Stahl/Rohr GmbH
Postfach 13 40
33043 Paderborn
Deutschland
Tel.: +49.5254.81-0 Fax: +49.5254.13666

BENTELER
Stahl/Rohr

ABNAHMEPRÜFZEUGNIS EN 10204-3.1
INSPECTION CERTIFICATE EN 10204-3.1
CERTIFICAT DE RECEPTION EN 10204-3.1

Dokument-Nr.: 65-322054/001/P
Document No.:
No. du document:

Prüf-Nr.:
Inspection No.:
No. du certificat:

Produktanalyse [%] / **Product analysis [%]** / Analyse sur produit [%]

Pos. / Item / Poste	Schmelzen-Nr. / Heat No. / No. de coulée	C	SI	MN	P	S	CR	MO	NI	CU	V	NB	TI	B
0024	533011	0,120	0,360	1,20	0,010	0,001	0,18	0,08	0,17	0,15	0,071	0,036	0,003	0,0005
0025	533011	0,120	0,360	1,20	0,010	0,001	0,18	0,08	0,17	0,14	0,071	0,038	0,003	0,0004

1. Formel: CE IIW=C+(Mn/6)+((Cr+Mo+V)/5)+((Cu+Ni)/15)<=0,42 %
2. Formel: CEV=C+F*((Mn/6)+(Si/24)+(Cu/15)+(Ni/20)+((Cr+Mo+V+Nb)/5) +(5*B)) <=0,40
3. Formel: Mn/C>=3/1
4. Formel: Cr+Cu+Mo+Ni+V<=1,00 %

Formelergebnisse / **Formula results** / Résultats des formules

Pos. / Item / Poste	Schmelzen-Nr / Heat No. / No. de coulée	1. Formel / 1. Formula / 1. Formule	2. Formel / 2. Formula / 2. Formule	3. Formel / 3. Formula / 3. Formule	4. Formel / 4. Formula / 4. Formule
0005	742270	0,290	0,265	6,000	0,261
0006	742252	0,325	0,305	6,071	0,382
0007	742251	0,324	0,303	6,000	0,391
0008	742284	0,334	0,311	5,786	0,501
0009	742179	0,349	0,325	5,786	0,602
0010	533054	0,351	0,328	5,929	0,611
0012	742241	0,324	0,303	6,000	0,391
0013	742168	0,349	0,326	5,786	0,611
0014	742349	0,398	0,327	11,273	0,607
0015	533278	0,403	0,330	11,545	0,600
0018	533108	0,397	0,325	11,091	0,638
0020	533011	0,417	0,359	10,417	0,641
0024	533011	0,408	0,352	10,000	0,651
0025	533011	0,407	0,351	10,000	0,641

Benteler Stahl/Rohr GmbH
Postfach 13 40
33043 Paderborn
Deutschland
Tel.: +49.5254.81-0 Fax: +49.5254.13668

BENTELER
Stahl/Rohr

ABNAHMEPRÜFZEUGNIS EN 10204-3.1
INSPECTION CERTIFICATE EN 10204-3.1
CERTIFICAT DE RECEPTION EN 10204-3.1

Dokument-Nr.: 65-322054/001/P
Document No.:
No. du document:

Prüf-Nr.:
Inspection No.:
No. du certificat:

Prüfergebnisse / Test results / Résultats des essais

Die Rohre sind auf Dichtheit geprüft durch: **The tubes have been submitted to a leak tightness test by:** Les tubes ont passé un contrôle d'étanchéité par:	Hydrostatic test: acc. to CSA Z245.1, holding time min 5 seconds, Test pressure/Time-record	PASSED

Augensichtkontrolle: **Visual inspection:** Examen visuel:	PASSED	Maßkontrolle: **Dimensions examination:** Vérification des dimensions:	PASSED	Ringfaltversuch: **Flattening test:** Essai d'aplatissement:	PASSED

Ergebnisse der mechanischen Prüfung / Results of mechanical testing / Résultats des essais mécaniques

Die Probenahme erfolgte an Vielfachlängen.
The sampling was carried out on multiple lengths.
L'echantillonage etait realise aux longueurs multiples.

Zugversuch Streifenprobe / Tensile test Strip test specimen / Essai de traction Bande decoupee sur tube

Pos. Item Poste	Proben-Nr. Specimen No. No. de l'éprouvette	Schmelzen-Nr. Heat No. No. de coulée	Probenabmessung Specimen dimensions Dimensions de l'éprouv.	Streckgrenze Yield strength Limite élastique	Zugfestigkeit Tensile strength Résistance à la traction	Dehnung Elongation Allongement		Einschnürung Area reduction Coefficient de striction	Re/Rm Re/Rm Re/Rm
Anforderungen Requirements Exigences			mm	ReH MPa 280-495	Rm MPa 415-625	A2" % MIN 30	1. Formel 1. Formula 1. Formule		
0005	000001	742270	12,70 X 6,00	341	464	36,00			
0005	000002	742270	12,70 X 5,50	348	468	36,00			
0005	000003	742270	12,70 X 5,50	350	473	32,00			
0006	000001	742252	19,00 X 3,80	383	477	37,00			
0006	000002	742252	19,00 X 3,80	371	482	37,00			
0006	000003	742252	19,00 X 3,80	386	493	37,00			
0007	000001	742251	19,00 X 3,80	384	489	36,00			
0007	000002	742251	19,00 X 3,80	378	484	37,00			
0007	000003	742251	19,00 X 3,80	364	490	38,00			
0008	000001	742284	19,00 X 5,70	340	479	36,00			
0008	000002	742284	19,00 X 5,40	362	491	36,00			
0008	000003	742284	19,00 X 5,50	345	476	38,00			

Benteler Stahl/Rohr GmbH
Postfach 13 40
33043 Paderborn
Deutschland
Tel.: +49.5254.81-0 Fax: +49.5254.13666

BENTELER
Stahl/Rohr

ABNAHMEPRÜFZEUGNIS EN 10204-3.1
INSPECTION CERTIFICATE EN 10204-3.1
CERTIFICAT DE RECEPTION EN 10204-3.1

Dokument-Nr.: 65-322054/001/P
Document No.:
No. du document:

Prüf-Nr.:
Inspection No.:
No. du certificat:

Zugversuch Streifenprobe / **Tensile test Strip test specimen** / Essai de traction Bande decoupee sur tube

Pos. **Item** Poste	Proben-Nr. **Specimen No.** No. de l'éprouvette	Schmelzen-Nr. **Heat No.** No. de coulée	Probenabmessung **Specimen dimensions** Dimensions de l'éprouv.	Streckgrenze **Yield strength** Limite élastique	Zugfestigkeit **Tensile strength** Résistance à la traction	Dehnung **Elongation** Allongement		Einschnürung **Area reduction** Coefficient de striction	Re/Rm **Re/Rm** Re/Rm
Anforderungen **Requirements** Exigences			mm	ReH MPa 290-495	Rm MPa 415-625	A2" % MIN 30	1. Formel **1. Formula** 1. Formule		
0008	000004	742284	19,00 X 5,30	357	489	38,00			
0008	000005	742284	19,00 X 5,30	347	485	36,00			
0008	000006	742284	19,00 X 5,40	348	477	36,00			
0008	000007	742284	19,00 X 5,60	348	484	36,00			
0008	000008	742284	19,00 X 5,50	353	490	36,00			
0009	000001	742179	19,00 X 9,10	330	467	40,00			
0009	000002	742179	19,00 X 9,00	339	476	40,00			
0009	000003	742179	19,00 X 9,00	344	475	40,00			
0009	000004	742179	19,00 X 8,90	326	462	40,00			
0010	000001	533054	19,00 X 8,80	331	471	38,00			
0010	000002	533054	19,00 X 8,90	341	473	38,00			
0010	000003	533054	19,00 X 9,10	331	471	36,00			
0012	000001	742241	25,40 X 5,90	363	477	38,00			
0012	000002	742241	25,40 X 5,40	378	474	38,00			
0012	000003	742241	25,40 X 5,80	375	482	36,00			
0012	000004	742241	25,40 X 5,50	366	481	36,00			
0012	000005	742241	25,40 X 5,50	392	491	38,00			
0012	000006	742241	25,40 X 5,60	386	494	36,00			
0012	000007	742241	25,40 X 5,80	375	476	36,00			
0012	000008	742241	25,40 X 5,50	383	492	38,00			
0012	000009	742241	25,40 X 5,60	366	481	38,00			
0013	000001	742168	25,40 X 7,30	334	474	44,00			
0013	000002	742168	25,40 X 7,30	341	477	44,00			

Benteler Stahl/Rohr GmbH
Postfach 13 40
33043 Paderborn
Deutschland
Tel.: +49.5254.81-0 Fax: +49.5254.13666

BENTELER
Stahl/Rohr

ABNAHMEPRÜFZEUGNIS EN 10204-3.1
INSPECTION CERTIFICATE EN 10204-3.1
CERTIFICAT DE RECEPTION EN 10204-3.1

Dokument-Nr.: 65-322054/001/P
Document No.:
No. du document:

Prüf-Nr.:
Inspection No.:
No. du certificat:

Zugversuch Streifenprobe / **Tensile test Strip test specimen** / Essai de traction Bande decoupee sur tube

Pos. **Item** Poste	Proben-Nr. **Specimen No.** No. de l'éprouvette	Schmelzen-Nr. **Heat No.** No. de coulée	Probenabmessung **Specimen dimensions** Dimensions de l'éprouv.	Streckgrenze **Yield strength** Limite élastique	Zugfestigkeit **Tensile strength** Résistance à la traction	Dehnung **Elongation** Allongement		Einschnürung **Area reduction** Coefficient de striction	Re/Rm **Re/Rm** Re/Rm
Anforderungen **Requirements** Exigences			mm	ReH MPa 290-495	Rm MPa 415-625	A2" % MIN 30	1. Formel **1. Formula** 1. Formule		
0013	000003	742168	25,40 X 7,70	338	475	40,00			
0013	000004	742168	25,40 X 7,60	345	478	40,00			
0013	000005	742168	25,40 X 7,70	340	470	42,00			
0013	000006	742168	25,40 X 7,30	331	469	40,00			
0014	000001	742349	25,40 X 11,00	416	527	42,00			
0014	000002	742349	25,40 X 11,00	391	517	42,00			
0014	000003	742349	25,40 X 11,20	394	518	42,00			
0015	000001	533278	25,40 X 10,70	385	525	46,00			
0015	000002	533278	25,40 X 10,70	386	530	44,00			
0018	000001	533108	25,40 X 6,10	417	535	38,00			
0018	000002	533108	25,40 X 5,90	404	537	38,00			
0018	000003	533108	25,40 X 5,80	409	533	40,00			
0018	000004	533108	25,40 X 6,20	409	536	38,00			
0018	000005	533108	25,40 X 6,00	414	546	38,00			
0018	000006	533108	25,40 X 6,00	400	524	36,00			
0018	000007	533108	25,40 X 6,10	409	534	40,00			
0018	000008	533108	25,40 X 6,30	406	534	36,00			
0018	000009	533108	25,40 X 6,10	392	552	38,00			
0018	000010	533108	25,40 X 6,30	402	533	38,00			
0018	000011	533108	25,40 X 6,00	402	531	40,00			
0018	000012	533108	25,40 X 6,10	403	528	36,00			
0018	000013	533108	25,40 X 5,90	416	552	38,00			
0018	000014	533108	25,40 X 6,00	404	540	38,00			

Benteler Stahl/Rohr GmbH
Postfach 13 40
33043 Paderborn
Deutschland
Tel.: +49.5254.81-0 Fax: +49.5254.13666

BENTELER
Stahl/Rohr

ABNAHMEPRÜFZEUGNIS EN 10204-3.1
INSPECTION CERTIFICATE EN 10204-3.1
CERTIFICAT DE RECEPTION EN 10204-3.1

Dokument-Nr.: 65-322054/001/P
Document No.:
No. du document:

Prüf-Nr.:
Inspection No.:
No. du certificat:

Zugversuch Streifenprobe / Tensile test Strip test specimen / Essai de traction Bande decoupee sur tube

Pos. Item Poste	Proben-Nr. Specimen No. No. de l'éprouvette	Schmelzen-Nr. Heat No. No. de coulée	Probenabmessung Specimen dimensions Dimensions de l'éprouv.	Streckgrenze Yield strength Limite élastique	Zugfestigkeit Tensile strength Résistance à la traction	Dehnung Elongation Allongement		Einschnürung Area reduction Coefficient de striction	Re/Rm Re/Rm Re/Rm
Anforderungen Requirements Exigences			mm	ReH MPa 290-495	Rm MPa 415-625	A2" % MIN 30	1. Formel 1. Formula 1. Formule		
0018	000015	533108	25,40 X 6,10	405	527	38,00			
0018	000016	533108	25,40 X 6,20	399	536	38,00			
0018	000017	533108	25,40 X 6,20	407	534	38,00			
0020	000001	533011	25,40 X 8,40	408	536	38,00			
0020	000002	533011	25,40 X 8,50	399	530	38,00			
0020	000003	533011	25,40 X 8,70	401	524	40,00			
0024	000001	533011	25,40 X 17,20	372	518	50,00			
0024	000002	533011	25,40 X 17,40	354	515	52,00			
0025	000001	533011	25,40 X 17,00	382	514	52,00			
0025	000002	533011	25,40 X 17,50	372	512	52,00			
0025	000003	533011	25,40 X 16,70	386	516	52,00			
0025	000004	533011	25,40 X 16,60	376	513	50,00			

Härteprüfung / Hardness test / Essai de dureté

Pos. Item Poste	Proben-Nr. Specimen No. No. de l'éprouv.	Schmelzen-Nr. Heat No. No. de coulée	Härte Hardness Dureté			
Anforderungen Requirements Exigences			HRC	HB MAX 200	HV	HRB
0005	000001	742270		148		
0005	000002	742270		148		
0005	000003	742270		150		
0006	000001	742252		144		
0006	000002	742252		142		

Benteler Stahl/Rohr GmbH
Postfach 13 40
33043 Paderborn
Deutschland
Tel.: +49.5254.81-0 Fax: +49.5254.13668

BENTELER
Stahl/Rohr

ABNAHMEPRÜFZEUGNIS EN 10204-3.1

INSPECTION CERTIFICATE EN 10204-3.1

CERTIFICAT DE RECEPTION EN 10204-3.1

Dokument-Nr.: **Document No.:** No. du document: 65-322054/001/P

Prüf-Nr.: **Inspection No.:** No. du certificat:

Härteprüfung / Hardness test / Essai de dureté

Pos. Item Poste	Proben-Nr. Specimen No. No. de l'éprouv.	Schmelzen-Nr. Heat No. No. de coulée	Härte Hardness Dureté			
Anforderungen Requirements Exigences			HRC	HB MAX 200	HV	HRB
0006	000003	742252		144		
0007	000001	742251		143		
0007	000002	742251		143		
0007	000003	742251		143		
0008	000001	742284		139		
0008	000002	742284		140		
0008	000003	742284		140		
0008	000004	742284		140		
0008	000005	742284		139		
0008	000006	742284		139		
0008	000007	742284		141		
0008	000008	742284		140		
0009	000001	742179		132		
0009	000002	742179		131		
0009	000003	742179		131		
0009	000004	742179		131		
0010	000001	533054		132		
0010	000002	533054		133		
0010	000003	533054		134		
0012	000001	742241		144		
0012	000002	742241		143		
0012	000003	742241		145		
0012	000004	742241		144		

Benteler Stahl/Rohr GmbH
Postfach 13 40
33043 Paderborn
Deutschland
Tel.: +49.5254.81-0 Fax: +49.5254.13666

BENTELER
Stahl/Rohr

ABNAHMEPRÜFZEUGNIS EN 10204-3.1

INSPECTION CERTIFICATE EN 10204-3.1
CERTIFICAT DE RECEPTION EN 10204-3.1

Dokument-Nr.: 65-322054/001/P
Document No.:
No. du document:

Prüf-Nr.:
Inspection No.:
No. du certificat:

Blatt: 11 / 18
Page:
Page:

Härteprüfung / **Hardness test** / Essai de dureté

Pos. **Item** Poste	Proben-Nr. **Specimen No.** No. de l'éprouv.	Schmelzen-Nr. **Heat No.** No. de coulée	Härte **Hardness** Dureté			
Anforderungen **Requirements** Exigences			HRC	HB MAX 200	HV	HRB
0012	000005	742241		142		
0012	000006	742241		144		
0012	000007	742241		143		
0012	000008	742241		143		
0012	000009	742241		144		
0013	000001	742168		142		
0013	000002	742168		142		
0013	000003	742168		143		
0013	000004	742168		143		
0013	000005	742168		143		
0013	000006	742168		143		
0014	000001	742349		150		
0014	000002	742349		152		
0014	000003	742349		152		
0015	000001	533278		156		
0015	000002	533278		156		
0018	000001	533108		161		
0018	000002	533108		158		
0018	000003	533108		159		
0018	000004	533108		161		
0018	000005	533108		163		
0018	000006	533108		162		
0018	000007	533108		161		

Benteler Stahl/Rohr GmbH
Postfach 13 40
33043 Paderborn
Deutschland
Tel.: +49.5254.81-0 Fax: +49.5254.13666

BENTELER
Stahl/Rohr

ABNAHMEPRÜFZEUGNIS EN 10204-3.1
INSPECTION CERTIFICATE EN 10204-3.1
CERTIFICAT DE RECEPTION EN 10204-3.1

Dokument-Nr.: 65-322054/001/P
Document No.:
No. du document:

Prüf-Nr.:
Inspection No.:
No. du certificat:

Härteprüfung / **Hardness test** / Essai de dureté

Pos. **Item** Poste	Proben-Nr. **Specimen No.** No. de l'éprouv.	Schmelzen-Nr. **Heat No.** No. de coulée	Härte **Hardness** Dureté			
Anforderungen **Requirements** Exigences			HRC	HB MAX 200	HV	HRB
0018	000008	533108		161		
0018	000009	533108		162		
0018	000010	533108		162		
0018	000011	533108		160		
0018	000012	533108		159		
0018	000013	533108		161		
0018	000014	533108		162		
0018	000015	533108		158		
0018	000016	533108		161		
0018	000017	533108		161		
0020	000001	533011		159		
0020	000002	533011		159		
0020	000003	533011		160		
0024	000001	533011		155		
0024	000002	533011		155		
0025	000001	533011		156		
0025	000002	533011		156		
0025	000003	533011		156		
0025	000004	533011		156		

Benteler Stahl/Rohr GmbH
Postfach 13 40
33043 Paderborn
Deutschland
Tel.: +49.5254.81-0 Fax: +49.5254.13666

BENTELER
Stahl/Rohr

ABNAHMEPRÜFZEUGNIS EN 10204-3.1
INSPECTION CERTIFICATE EN 10204-3.1
CERTIFICAT DE RECEPTION EN 10204-3.1

Dokument-Nr.: 65-322054/001/P
Document No.:
No. du document:

Prüf-Nr.:
Inspection No.:
No. du certificat:

Kerbschlagbiegeversuch / Notched bar impact test / Essai de flexion par choc (résilience) [CHARPY-V]

Pos. Item Poste	Proben-Nr. Specimen No. No. de l'éprouv.	Schmelzen-Nr. Heat No. No. de coulée	Probenabmessung Specimen dimensions Dimensions de l'éprouvette			Probenlage Specimen position Position de l'éprouvette	Prüftemperatur Test temperature Température d'essai	Kerbschlagarbeit Absorbed energy Energie absorbée		Kerbschlagzähigkeit Impact strength Résistance au choc		Verf.-Bruchanteil Shear fracture Rupture ductile	
Anforderungen Requirements Exigences			Länge Length Longueur	Breite Width Largeur	Höhe Height Hauteur	längs (L) longitudinal (L) longitudinal (L)		einzel single Individuelle	mittel average moyenne	einzel single Individuelle	mittel average moyenne	single	average
			mm	mm	mm	quer (Q) transversal (Q) transversal (Q)	GRAD °C	J	J	J/cm²	J/cm²	%	
			55	10,00	10,00		-45	MIN 027				min.50	min.60
0024	000001	533011	55	10,00	10,00	Q	-45	133				60	
				10,00	10,00			128				60	
				10,00	10,00			139	133			60	60
0024	000004	533011	55	10,00	10,00	L	-45	174				60	
				10,00	10,00			213				70	
				10,00	10,00			214	200			70	67
0025	000001	533011	55	10,00	10,00	Q	-45	144				60	
				10,00	10,00			135				60	
				10,00	10,00			150	143			60	60
0025	000004	533011	55	10,00	10,00	L	-45	206				85	
				10,00	10,00			212				85	
				10,00	10,00			222	213			85	85

Kerbschlagbiegeversuch / Notched bar impact test / Essai de flexion par choc (résilience) [CHARPY-V]

Pos. Item Poste	Proben-Nr. Specimen No. No. de l'éprouv.	Schmelzen-Nr. Heat No. No. de coulée	Probenabmessung Specimen dimensions Dimensions de l'éprouvette			Probenlage Specimen position Position de l'éprouvette	Prüftemperatur Test temperature Température d'essai	Kerbschlagarbeit Absorbed energy Energie absorbée		Kerbschlagzähigkeit Impact strength Résistance au choc		Verf.-Bruchanteil Shear fracture Rupture ductile	
Anforderungen Requirements Exigences			Länge Length Longueur	Breite Width Largeur	Höhe Height Hauteur	längs (L) longitudinal (L) longitudinal (L)		einzel single Individuelle	mittel average moyenne	einzel single Individuelle	mittel average moyenne		
			mm	mm	mm	quer (Q) transversal (Q) transversal (Q)	GRAD °C	J	J	J/cm²	J/cm²		
			55	6,67	10,00		-45	MIN 018					
0013	000001	742168	55	6,67	10,00	L	-45	133					
				6,67	10,00			140					
				6,67	10,00			126	133				

Benteler Stahl/Rohr GmbH
Postfach 13 40
33043 Paderborn
Deutschland
Tel.: +49.5254.81-0 Fax: +49.5254.13886

BENTELER
Stahl/Rohr

ABNAHMEPRÜFZEUGNIS EN 10204-3.1
INSPECTION CERTIFICATE EN 10204-3.1
CERTIFICAT DE RECEPTION EN 10204-3.1

Dokument-Nr.: 65-322054/001/P
Document No.:
No. du document:

Prüf-Nr.:
Inspection No.:
No. du certificat:

Kerbschlagbiegeversuch / Notched bar impact test / Essai de flexion par choc (résilience) [CHARPY-V]

Pos. Item Poste	Proben-Nr. Specimen No. No. de l'éprouv.	Schmelzen-Nr. Heat No. No. de coulée	Probenabmessung Specimen dimensions Dimensions de l'éprouvette			Probenlage Specimen position Position de l'éprouvette	Prüftemperatur Test temperature Température d'essai	Kerbschlagarbeit Absorbed energy Energie absorbée		Kerbschlagzähigkeit Impact strength Résistance au choc		Verf.-Bruchanteil Shear fracture Rupture ductile
Anforderungen Requirements Exigences			Länge Length Longueur	Breite Width Largeur	Höhe Height Hauteur	längs (L) longitudinal (L) longitudinal (L)		einzel single Individuelle	mittel average moyenne	einzel single Individuelle	mittel average moyenne	
			mm	mm	mm	quer (Q) transversal (Q) transversal (Q)	GRAD °C	J	J	J/cm²	J/cm²	
			55	7,50	10,00		-45	MIN 020				
0009	000001	742179	55	7,50	10,00	L	-45	138				
				7,50	10,00			160				
				7,50	10,00			141	146			
0010	000001	533054	55	7,50	10,00	L	-45	126				
				7,50	10,00			124				
				7,50	10,00			117	122			

Kerbschlagbiegeversuch / Notched bar impact test / Essai de flexion par choc (résilience) [CHARPY-V]

Pos. Item Poste	Proben-Nr. Specimen No. No. de l'éprouv.	Schmelzen-Nr. Heat No. No. de coulée	Probenabmessung Specimen dimensions Dimensions de l'éprouvette			Probenlage Specimen position Position de l'éprouvette	Prüftemperatur Test temperature Température d'essai	Kerbschlagarbeit Absorbed energy Energie absorbée		Kerbschlagzähigkeit Impact strength Résistance au choc		Verf.-Bruchanteil Shear fracture Rupture ductile	
Anforderungen Requirements Exigences			Länge Length Longueur	Breite Width Largeur	Höhe Height Hauteur	längs (L) longitudinal (L) longitudinal (L)		einzel single individuelle	mittel average moyenne	einzel single Individuelle	mittel average moyenne	single	average
			mm	mm	mm	quer (Q) transversal (Q) transversal (Q)	GRAD °C	J	J	J/cm²	J/cm²	%	
			55	7,50	10,00		-45	MIN 020				min.50	min.60
0020	000001	533011	55	5,00	10,00	Q	-56	61				60	
				5,00	10,00			54				60	
				5,00	10,00			56	57			60	60
0020	000004	533011	55	7,50	10,00	L	-45	205				85	
				7,50	10,00			209				85	
				7,50	10,00			196	203			85	85

Benteler Stahl/Rohr GmbH
Postfach 13 40
33043 Paderborn
Deutschland
Tel.: +49.5254.81-0 Fax: +49.5254.13666

BENTELER
Stahl/Rohr

ABNAHMEPRÜFZEUGNIS EN 10204-3.1
INSPECTION CERTIFICATE EN 10204-3.1
CERTIFICAT DE RECEPTION EN 10204-3.1

Dokument-Nr.: 65-322054/001/P
Document No.:
No. du document:

Prüf-Nr.:
Inspection No.:
No. du certificat:

Kerbschlagbiegeversuch / Notched bar impact test / Essai de flexion par choc (résilience) [CHARPY-V]

Pos. / Item / Poste	Proben-Nr. / Specimen No. / No. de l'éprouv.	Schmelzen-Nr. / Heat No. / No. de coulée	Probenabmessung / Specimen dimensions / Dimensions de l'éprouvette			Probenlage / Specimen position / Position de l'éprouvette	Prüftemperatur / Test temperature / Température d'essai	Kerbschlagarbeit / Absorbed energy / Energie absorbée		Kerbschlagzähigkeit / Impact strength / Résistance au choc		Verf.-Bruchanteil / Shear fracture / Rupture ductile	
			Länge / Length / Longueur	Breite / Width / Largeur	Höhe / Height / Hauteur	längs (L) / longitudinal (L) / longitudinal (L)		einzel / single / individuelle	mittel / average / moyenne	einzel / single / individuelle	mittel / average / moyenne	single	average
Anforderungen / Requirements / Exigences						quer (Q) / transversal (Q) / transversal (Q)	GRAD / °C /					%	
			mm	mm	mm		°C	J	J	J/cm²	J/cm²		
			55	5,00	10,00		-45	MIN 014				min.50	min.60
0018	000001	533108	55	5,00	10,00	Q	-45	90				85	
				5,00	10,00			95				85	
				5,00	10,00			97	94			85	85
0018	000004	533108	55	5,00	10,00	L	-45	130				85	
				5,00	10,00			127				70	
				5,00	10,00			133	130			85	80

Kerbschlagbiegeversuch / Notched bar impact test / Essai de flexion par choc (résilience) [CHARPY-V]

Pos. / Item / Poste	Proben-Nr. / Specimen No. / No. de l'éprouv.	Schmelzen-Nr. / Heat No. / No. de coulée	Probenabmessung / Specimen dimensions / Dimensions de l'éprouvette			Probenlage / Specimen position / Position de l'éprouvette	Prüftemperatur / Test temperature / Température d'essai	Kerbschlagarbeit / Absorbed energy / Energie absorbée		Kerbschlagzähigkeit / Impact strength / Résistance au choc		Verf.-Bruchanteil / Shear fracture / Rupture ductile	
			Länge / Length / Longueur	Breite / Width / Largeur	Höhe / Height / Hauteur	längs (L) / longitudinal (L) / longitudinal (L)		einzel / single / individuelle	mittel / average / moyenne	einzel / single / individuelle	mittel / average / moyenne		
Anforderungen / Requirements / Exigences						quer (Q) / transversal (Q) / transversal (Q)	GRAD / °C /						
			mm	mm	mm		°C	J	J	J/cm²	J/cm²		
			55	5,00	10,00		-45	MIN 014					
0005	000001	742270	55	5,00	10,00	L	-45	114					
				5,00	10,00			109					
				5,00	10,00			110	111				
0008	000001	742284	55	5,00	10,00	L	-45	94					
				5,00	10,00			98					
				5,00	10,00			93	95				
0012	000001	742241	55	5,00	10,00	L	-45	95					
				5,00	10,00			94					
				5,00	10,00			93	94				

Benteler Stahl/Rohr GmbH
Postfach 13 40
33043 Paderborn
Deutschland
Tel.: +49.5254.81-0 Fax: +49.5254.13666

BENTELER
Stahl/Rohr

ABNAHMEPRÜFZEUGNIS EN 10204-3.1
INSPECTION CERTIFICATE EN 10204-3.1
CERTIFICAT DE RECEPTION EN 10204-3.1

Dokument-Nr.: 65-322054/001/P
Document No.:
No. du document:

Prüf-Nr.:
Inspection No.:
No. du certificat:

Blatt: 16 / 18
Page:
Page:

Kerbschlagbiegeversuch / Notched bar impact test / Essai de flexion par choc (résilience) [CHARPY-V]

Pos. Item Poste	Proben-Nr. Specimen No. No. de l'éprouv.	Schmelzen-Nr. Heat No. No. de coulée	Probenabmessung Specimen dimensions Dimensions de l'éprouvette			Probenlage Specimen position Position de l'éprouvette	Prüftemperatur Test temperature Température d'essai	Kerbschlagarbeit Absorbed energy Energie absorbée		Kerbschlagzähigkeit Impact strength Résistance au choc		Verf.-Bruchanteil Shear fracture Rupture ductile
			Länge Length Longueur	Breite Width Largeur	Höhe Height Hauteur	längs (L) longitudinal (L) longitudinal (L)		einzel single individuelle	mittel average moyenne	einzel single individuelle	mittel average moyenne	
Anforderungen Requirements Exigences						quer (Q) transversal (Q) transversal (Q)	GRAD °C	J	J	J/cm²	J/cm²	
			mm	mm	mm							
			55	3,33	10,00		-45	MIN 009				
0006	000001	742252	55	3,33	10,00	L	-45	63				
				3,33	10,00			65				
				3,33	10,00			61	63			
0007	000001	742251	55	3,33	10,00	L	-45	63				
				3,33	10,00			63				
				3,33	10,00			62	63			

Kerbschlagbiegeversuch / Notched bar impact test / Essai de flexion par choc (résilience) [CHARPY-V]

Pos. Item Poste	Proben-Nr. Specimen No. No. de l'éprouv.	Schmelzen-Nr. Heat No. No. de coulée	Probenabmessung Specimen dimensions Dimensions de l'éprouvette			Probenlage Specimen position Position de l'éprouvette	Prüftemperatur Test temperature Température d'essai	Kerbschlagarbeit Absorbed energy Energie absorbée		Kerbschlagzähigkeit Impact strength Résistance au choc		Verf.-Bruchanteil Shear fracture Rupture ductile
			Länge Length Longueur	Breite Width Largeur	Höhe Height Hauteur	längs (L) longitudinal (L) longitudinal (L)		einzel single individuelle	mittel average moyenne	einzel single individuelle	mittel average moyenne	
Anforderungen Requirements Exigences						quer (Q) transversal (Q) transversal (Q)	GRAD °C	J	J	J/cm²	J/cm²	
			mm	mm	mm							
			55	10,00	10,00		-45	MIN 027				
0014	000001	742349	55	10,00	10,00	L	-45	260				
				10,00	10,00			253				
				10,00	10,00			267	260			
0015	000001	533278	55	10,00	10,00	L	-45	282				
				10,00	10,00			279				
				10,00	10,00			268	276			

Benteler Stahl/Rohr GmbH
Postfach 13 40
33043 Paderborn
Deutschland
Tel.: +49.5254.81-0 Fax: +49.5254.13666

BENTELER
Stahl/Rohr

ABNAHMEPRÜFZEUGNIS EN 10204-3.1
INSPECTION CERTIFICATE EN 10204-3.1
CERTIFICAT DE RECEPTION EN 10204-3.1

Dokument-Nr.: **Document No.:** No. du document: 65-322054/001/P

Prüf-Nr.: **Inspection No.:** No. du certificat:

Restmagnetismus / **Demagnetize** / Démagnétiser

residual magnetic field intensity max 3,5 millitesla

Pos. **Item** Poste	Ihr Zeichen **Your reference** Votre référence	Kundenmaterial **Customer's Material No.** No. de matière du client	Kundenbestell-Nr. **Purchase Order No.** No. de commande du client
0005		P.O. 45000438	06-5582 / 45000438
0006		P.O. 45000438	06-5582 / 45000438
0007		P.O. 45000438	06-5582 / 45000438
0008		P.O. 45000438	06-5582 / 45000438
0009		P.O. 45000438	06-5582 / 45000438
0010		P.O. 45000438	06-5582 / 45000438
0012		P.O. 45000438	06-5582 / 45000438
0013		P.O. 45000438	06-5582 / 45000438
0014		P.O. 45000438	06-5582 / 45000438
0015		P.O. 45000438	06-5582 / 45000438
0018		P.O. 45000438	06-5582 / 45000438
0020		P.O. 45000438	06-5582 / 45000438
0024		P.O. 45000438	06-5582 / 45000438
0025		P.O. 45000438	06-5582 / 45000438

Vermerk / **Remark** / Remarque

NACE Standard: Hardness acc. to NACE MR0175/ISO 15156: HRC max 22., The material meets the requirements of NACE MR0103; Certificate remarks: Sour Service, This is to confirm that the seamless linepipe supplied, by Benteler and verified to CSA Standard Z245.1-02 meets, the requirement for micro hardness of max. 248 HV 500.

Benteler Stahl/Rohr GmbH
Postfach 13 40
33043 Paderborn
Deutschland
Tel.: +49.5254.81-0 Fax: +49.5254.13666

BENTELER
Stahl/Rohr

ABNAHMEPRÜFZEUGNIS EN 10204-3.1

INSPECTION CERTIFICATE EN 10204-3.1
CERTIFICAT DE RÉCEPTION EN 10204-3.1

Dokument-Nr.: 65-322054/001/P
Document No.:
No. du document:

Prüf-Nr.:
Inspection No.:
No. du certificat:

Blatt: 18 / 18
Page:
Page:

Beiblatt Produktkennzeichnung / **Attachment product marking** / Supplément marquage du produit

Pos.	Produktkennzeichnung
Item	**Produktkennzeichnung**
Poste	Marquage du produit

0005, 0006, 0007, 0008, 0009, 0010, 0012, 0013, 0014, 0015, 0018, 0020

FS: BENTELER Z.245.1-A/SA-333 6/290 CAT II HEAT-NO. M45C S HN DIMENSIONS SCHE DULE WA GERMANY P.O. 45000438

0024, 0025

FS: BENTELER Z.245.1-A/SA-333 6/290 CAT II HEAT-NO. M45C S HN DIMENSIONS WEIG HT CLASS WA GERMANY P.O. 45000438

FK = Farbkennzeichnung, colour marking, marquage par couleur FS = Farbschablonierung, paint stenciling, marquage par peinture FSD = Farbstrahldrucker, Colour jet printer, imprimante à jet d'encre de couleur LS = Längsschablonierung, longitudinal stenciling, marquage longitudinal par peinture PKE = Etikettenkennzeichnung, tag marking, marquage sur étiquette PS = Prägestempel, die stamp, marquage par poinçonnage TS = Tintenstrahlkennzeichnung, Ink jet spray marking, imprimante à jet d'encre

Verkäufer(in) / **Salesman/ woman in charge** / Personne chargée : Mr Seelbach, Tel.: 05254/81-4281, Fax: 4289

Wärmebehandlung / Heat treatment / Traitement thermique
Normalized: 890° C; Holding time: 5 min.

Dinslaken, 21.03.2006, TEL.: 02064.623-537 FAX: 02064.623-539

Abnahmebeauftragter
Inspection representative
Contrôleur
ROLF TRITTEL / WAG

Es wird bestätigt, daß die gelieferten Erzeugnisse den techn. Lieferbedingungen des Auftrages entsprechen.Dieses Dokument wurde mittels EDV erstellt und ist ohne Unterschrift rechtsgültig.
We certify that the supplied products comply with the order specification.This document was prepared by means of electronic data processing and is valid without signature.
Nous attestons que les produits livrés sont conformes aux stipulations de la commande.Ce document a été établi par traitement électronique de l'information et est valide sans signature.

18378 US

METALFAR

PRODOTTI INDUSTRIALI S.P.A.
23861 CESANA BRIANZA (LC) ITALY
Tel. 031.655441 - Fax 031.655149
MATERIAL TEST DEPARTMENT
SALA PROVE ED ANALISI MATERIALI

COMPANY WITH QUALITY MANAGEMENT SYSTEM CERTIFIED BY DNV = ISO 9001 : 2000 =

TRANS AM PIPING PRODUCTS LTD
9335 ENDEAVOR DRIVE S.E.
CALGARY-ALBERTA T3S 0 A1

INSPECTION CERTIFICATE EN 10204/3.1 — *CERTIFICATO DI COLLAUDO*

N.: 541/ 12/02/2009
INVOICE / *FATTURA*: S.: 57261
DEL. NOTE / *BOLLA*:
PAG.: 1

2" CL 900/1500 W/N FLANGE RF
SCH 160 BORE A350-LF2 CL 1

AT CODE / D. COLATA	HEAT / COLATA	ITEM / POS.	YOUR P.O. / VS. ORDINE	OUR REFERENCE / NS. ORDINE	QUANTITY / QUANTITÀ	DESCRIPTION / DESCRIZIONE		DIM. ACCORDANCE TO / DIM. IN ACCORDO A	VISUAL & DIMENSIONAL / VISIVO E DIMENSIONALE
	74524	0116	CI08-570	08003987 0124		S/W 150 RF 3/4" 80	A105	ASME/ANSI B16.5	SATISFACTORY
	697780.	0011	CI08-574	08003989 0021		W/B 150 RF 4" XS	LF2CL1	ASME/ANSI B16.5	SATISFACTORY
	76351.	0022	CI08-574	08003989 0032		W/N 300 RF 1/2" XXS	LF2CL1	ASME/ANSI B16.5	SATISFACTORY
	38856.	0038	CI08-574	08003989 0048		W/N 900 RF 4" XS	LF2CL1	ASME/ANSI B16.5	SATISFACTORY
	34846.	0041	CI08-574	08003989 0051		W/N 1500 RF 2" 160	LF2CL1	ASME/ANSI B16.5	SATISFACTORY
	74366.	0060	CI08-574	08003989 0070		BLIND 600 RF 3/4"	LF2CL1	ASME/ANSI B16.5	SATISFACTORY

OK

AT CODE / D. COLATA	HEAT / COLATA	ITEM / POS.	MATERIAL / MATERIALE	C %	Si %	Mn %	S %	P %	Cr %	Ni %	Mo %	Ti %	Cu %	V %	Nb %	N %	Al %	C.E. %	ORIGIN / ORIGIN.
	74524	0116	ASTM A 105	0.190	0.240	0.990	0.009	0.019	0.140	0.070	0.010	0.006	0.220	0.001	0.000	0.000	0.027	0.404	EUROPE
	697780.	0011	ASTM A350 LF2 CL1/2	0.192	0.231	1.100	0.013	0.013	0.056	0.028	0.008	0.001	0.020	0.002	0.001	0.000	0.028	0.391	EUROPE
	76351.	0022	ASTM A350 LF2 CL1/2	0.185	0.210	1.090	0.015	0.015	0.090	0.050	0.010	0.024	0.200	0.025	0.000	0.000	0.025	0.408	EUROPE
	38856.	0038	ASTM A350 LF2 CL1/2	0.195	0.250	1.130	0.013	0.012	0.120	0.050	0.010	0.017	0.150	0.025	0.002	0.000	0.025	0.427	EUROPE
	34846.	0041	ASTM A350 LF2 CL1/2	0.185	0.220	1.100	0.010	0.012	0.130	0.060	0.010	0.015	0.170	0.021	0.001	0.000	0.025	0.415	EUROPE
	74366.	0060	ASTM A350 LF2 CL1/2	0.185	0.210	1.110	0.014	0.015	0.120	0.050	0.010	0.020	0.150	0.023	0.000	0.000	0.026	0.413	EUROPE

AT CODE / D. COLATA	HEAT / COLATA	ITEM / POS.	TEST SPECIMEN mm² PROVETTA SEZIONE Sezione	TEST SPECIMEN mm LUNGHEZZA Lunghezza	YIELD POINT Snervamento N/mm² ≥ 0,2 %	TENSILE STRENGHT Rottura N/mm² ≥	ELONGATION Allungamento % ≥	REDUCTION OF AREA Contrazione % ≥	HARDNESS Durezza Hb	BEND TEST Piega	FLATTENIN TEST Schiacciam.	IMPACT TEST - Resilienza Joule / cm² U.M.	TYPE TIPO 10x10 mm	°C	1	2	3	SHAPE FORMA 1 = ▭ 2 = □	S	W	X	YIELD POINT SNERVAMENTO N/mm² ≥ 1,0 %	001
	74524	0116	126.60	50.80	329.0	532	31.0	58.0	163-165	0.0	0.0		KV	20	82	86	84	1				0.0	
	697780.	0011	126.60	50.80	338.0	542	30.0	59.0	163-165	0.0	0.0		KV	-50	62	60	64	1				0.0	
	76351.	0022	126.60	50.80	338.0	547	33.0	61.0	164-166	0.0	0.0		KV	-50	57	61	64	1				0.0	
	38856.	0038	126.60	50.80	385.0	540	28.0	59.0	164-166	0.0	0.0		KV	-50	66	66	61	1				0.0	
	34846.	0041	126.60	50.80	371.0	526	30.0	59.0	159-163	0.0	0.0		KV	-50	60	65	68	1				0.0	
	74366.	0060	126.60	50.80	340.0	550	32.0	59.0	166-170	0.0	0.0		KV	-50	63	66	63	1				0.0	

AT CODE / D. COLATA	HEAT / COLATA	ITEM / POS.	MATERIAL IN ACCORDANCE TO / MATERIALE IN ACCORDO A	HEAT TREATMENT / TRATTAMENTO TERMICO	
	74524	0116	ASTM/ASME A 105/SA 105 M - 05	NORMALIZED AT 920 C - COOLED IN STILL AIR	ELECTRIC FURNACE
	697780.	0011	ASTM/ASME A 350/SA 350 M - 04a	NORMALIZED AT 930 C - COOLED IN STILL AIR	ELECTRIC FURNACE
	76351.	0022	ASTM/ASME A 350/SA 350 M - 04a	NORMALIZED AT 930 C - COOLED IN STILL AIR	ELECTRIC FURNACE
	38856.	0038	ASTM/ASME A 350/SA 350 M - 04a	NORMALIZED AT 930 C - COOLED IN STILL AIR	ELECTRIC FURNACE
	34846.	0041	ASTM/ASME A 350/SA 350 M - 04a	NORMALIZED AT 930 C - COOLED IN STILL AIR	ELECTRIC FURNACE
	74366.	0060	ASTM/ASME A 350/SA 350 M - 04a	NORMALIZED AT 930 C - COOLED IN STILL AIR	ELECTRIC FURNACE

E
.TERIAL IN ACCORDANCE WITH NACE MR-0175/2003

CE H 0.4 158667

CONFORMS TO ASME SEC II PART A
2007 EDITION 20 08 ADDENDA
SIGNED
DATE Jun 6 08

QUALITY CONTROL DEPARTMENT / UFFICIO CONTROLLO QUALITÀ	INSPECTION AUTHORITY / ENTE UFFICIALE COLLAUDO	MANUFACTURER'S SYMBOL / MARCHIO PRODUZIONE
BRACCHI FLAVIO		MFF

HEAT NUMBER : 34846
TRANS AM PIPING PRODUCTS - REV'D BY:
Shipment/Seq #: S 9 - 1069 44

18378

METALFAR

PRODOTTI INDUSTRIALI S.P.A.
23861 CESANA BRIANZA (LC) ITALY
Tel. 031.655441 - Fax 031.655149
MATERIAL TEST DEPARTMENT
SALA PROVE ED ANALISI MATERIALI

COMPANY WITH QUALITY MANAGEMENT SYSTEM CERTIFIED BY DNV = ISO 9001 : 2000 =

TRANS AM PIPING PRODUCTS LTD
9335 ENDEAVOR DRIVE S.E.
CALGARY-ALBERTA T3S 0 A1

INSPECTION CERTIFICATE EN 10204/3.1 — *CERTIFICATO DI COLLAUDO*

N.: 1989/ 21/05/2008
INVOICE / FATTURA: 1505/ 20/05/2008
S.: 54309
DEL. NOTE / BOLLA: 2707/ 20/05/2008

PAG.: 1

2" CL 900/1500 W/N FLANGE RF
SCH 160 BORE A350-LF2 CL 1

T CODE / COLATA	HEAT / COLATA	ITEM / POS.	YOUR P.O. / VS. ORDINE	OUR REFERENCE / NS. ORDINE	QUANTITY / QUANTITÀ	DESCRIPTION / DESCRIZIONE	DIM. ACCORDANCE TO / DIM. IN ACCORDO A	VISUAL & DIMENSIONAL / VISIVO E DIMENSIONALE
	34682	0021	C108-297	08001705 0031		W/N 600 RF 2" XS A105	ASME/ANSI B16.5	SATISFACTORY
	35020	0009	C108-176	08000725 0017		W/N 150 RF 5" XS A105	ASME/ANSI B16.5	SATISFACTORY
	35020	0008	C108-212	08001018 0018		W/N 150 RF 5" XS A105	ASME/ANSI B16.5	SATISFACTORY
	34682	0021	C108-297	08001705 0031		W/N 600 RF 2" XS A105	ASME/ANSI B16.5	SATISFACTORY
	34634	0013	C108-297	08001705 0023		W/N 150 FF 4" STD A105	ASME/ANSI B16.5	SATISFACTORY
	32764.	0041	C108-252	08001475 0050		W/N 1500 RF 2" 160 LF2CL1	ASME/ANSI B16.5	SATISFACTORY

T CODE / COLATA	HEAT / COLATA	ITEM / POS.	MATERIAL / MATERIALE	C %	Si %	Mn %	S %	P %	Cr %	Ni %	Mo %	Ti %	Cu %	V %	Nb %	N %	Al %	C.E. %	ORIGIN / ORIGIN
	34682	0021	ASTM A 105	0.200	0.240	0.950	0.015	0.019	0.130	0.060	0.010	0.008	0.180	0.003	0.002	0.000	0.005	0.402	EUROPE
	35020	0009	ASTM A 105	0.210	0.240	0.950	0.018	0.015	0.110	0.050	0.010	0.008	0.170	0.003	0.000	0.000	0.006	0.407	EUROPE
	35020	0008	ASTM A 105	0.210	0.240	0.950	0.018	0.015	0.110	0.050	0.010	0.008	0.170	0.003	0.000	0.000	0.006	0.407	EUROPE
	34682	0021	ASTM A 105	0.200	0.240	0.950	0.015	0.019	0.130	0.060	0.010	0.008	0.180	0.003	0.002	0.000	0.005	0.402	EUROPE
	34634	0013	ASTM A 105	0.190	0.250	0.990	0.021	0.019	0.140	0.060	0.010	0.010	0.200	0.004	0.002	0.000	0.006	0.403	EUROPE
	32764.	0041	ASTM A350 LF2 CL1/2	0.190	0.220	1.090	0.011	0.012	0.100	0.050	0.010	0.015	0.160	0.023	0.001	0.000	0.025	0.412	EUROPE

T CODE / COLATA	HEAT / COLATA	ITEM / POS.	TEST SPECIMEN mm PROVETTA SECTION / Sezione	TEST SPECIMEN mm LENGHT / Lunghezza	YIELD POINT Snervamento N/mm² ≥ 0,2 %	TENSILE STRENGHT Rottura N/mm² ≥	ELONGATION Allungamento % ≥	REDUCTION OF AREA Contrazione % ≥	HARDNESS Durezza Hb	BEND TEST Piega	FLATTENING TEST Schiacciam	IMPACT TEST - Resilienza Joule / cm² U.M.	TYPE TIPO 10x10 mm	°C	1	2	3	SHAPE FORMA 1 = ◻ 2 = ◯	S	W	X	YIELD POINT SNERVAMENTO N/mm² ≥ 10 %	OUT
	34682	0021	126.60	50.80	362.0	526	30.0	58.0	159-163	0.0	0.0		KV	20	86	85	87	1				0.0	
	35020	0009	126.60	50.80	372.0	534	30.0	59.0	163-165	0.0	0.0		KV	20	88	85	85	1				0.0	
	35020	0008	126.60	50.80	372.0	534	30.0	59.0	163-165	0.0	0.0		KV	20	88	85	85	1				0.0	
	34682	0021	126.60	50.80	362.0	526	30.0	58.0	159-163	0.0	0.0		KV	20	86	85	87	1				0.0	
	34634	0013	126.60	50.80	355.0	521	31.0	59.0	159-163	0.0	0.0		KV	20	86	84	84	1				0.0	
	32764.	0041	126.60	50.80	374.0	530	30.0	58.0	163-165	0.0	0.0		KV	-50	63	60	65	1				0.0	

T CODE / COLATA	HEAT / COLATA	ITEM / POS.	MATERIAL IN ACCORDANCE TO / MATERIALE IN ACCORDO A	HEAT TREATMENT / TRATTAMENTO TERMICO
	34682	0021	ASTM/ASME A 105/SA 105 M - 05	NORMALIZED AT 920 C - COOLED IN STILL AIR ELECTRIC FURNACE
	35020	0009	ASTM/ASME A 105/SA 105 M - 05	NORMALIZED AT 920 C - COOLED IN STILL AIR ELECTRIC FURNACE
	35020	0008	ASTM/ASME A 105/SA 105 M - 05	NORMALIZED AT 920 C - COOLED IN STILL AIR ELECTRIC FURNACE
	34682	0021	ASTM/ASME A 105/SA 105 M - 05	NORMALIZED AT 920 C - COOLED IN STILL AIR ELECTRIC FURNACE
	34634	0013	ASTM/ASME A 105/SA 105 M - 05	NORMALIZED AT 920 C - COOLED IN STILL AIR ELECTRIC FURNACE
	32764.	0041	ASTM/ASME A 350/SA 350 M - 04a	NORMALIZED AT 930 C - COOLED IN STILL AIR ELECTRIC FURNACE

CE # 0-0122667

MATERIAL IN ACCORDANCE WITH NACE MR-0175/2005

CONFORMS TO ASME SEC II PART A
2007 EDITION 2008 ADDENDA
SIGNED
DATE June 4 09

QUALITY CONTROL DEPARTMENT / UFFICIO CONTROLLO QUALITÀ	INSPECTION AUTHORITY / ENTE UFFICIALE COLLAUDO	MANUFACTURER'S SYMBOL / MARCHIO PRODUZIONE
BRACCHI FLAVIO		MFF

HEAT NUMBER : 32764
TRANS AM PIPING PRODUCTS - REV'D BY:
Shipment/Seq #: S 8 - 1209 17

18378

METALFAR

PRODOTTI INDUSTRIALI S.P.A.
23861 CESANA BRIANZA (LC) ITALY
Tel. 031.655441 - Fax 031.655149
MATERIAL TEST DEPARTMENT
SALA PROVE ED ANALISI MATERIALI

COMPANY WITH QUALITY MANAGEMENT SYSTEM CERTIFIED BY DNV = ISO 9001 : 2000 =

TRANS AM PIPING PRODUCTS LTD
9335 ENDEAVOR DRIVE S.E.
CALGARY-ALBERTA T3S 0 A1

INSPECTION CERTIFICATE EN 10204/3.1 — *CERTIFICATO DI COLLAUDO*

N.: 1197/ 25/03/2009
INVOICE / FATTURA: 880/ 24/03/2009
S.: 57785
DEL. NOTE / BOLLA: 1539/ 24/03/2009

PAG.: 1

4" CL 900 W/N FLANGE RF
SCH 160 BORE A350-LF2 CL 1

HEAT NUMBER : 31565
TRANS AM PIPING PRODUCTS - REV'D BY:
Shipment/Seq #: S 9 - 1183 14

AT CODE D. COLATA	HEAT COLATA	ITEM POS.	YOUR P.O. VS. ORDINE	OUR REFERENCE NS. ORDINE	QUANTITY QUANTITÀ	DESCRIPTION DESCRIZIONE		DIM. ACCORDANCE TO DIM. IN ACCORDO A	VISUAL & DIMENSIONAL VISIVO E DIMENSIONALE
	31565.	0042	CI08-574	08003989 0052		W/N 900 RF 4" 160	LF2CL1	ASME/ANSI B16.5	SATISFACTORY
	31565.	0037	CI08-635	08004475 0047		W/N 900 RF 4" 160	LF2CL1	ASME/ANSI B16.5	SATISFACTORY
	33222	0093	I09-112	09000168 0101		W/N 900 RTJ 4" 160	A105	ASME/ANSI B16.5	SATISFACTORY
	09/34191	0060	CI09-141	09000423 0070		S/O 150 RF 6"	A105	ASME/ANSI B16.5	SATISFACTORY
	76178	0002	CI09-195	09000883 0012		W/N 150 RF 4" STD	A105	ASME/ANSI B16.5	SATISFACTORY
	76178	0002	CI09-195	09000883 0012		W/N 150 RF 4" STD	A105	ASME/ANSI B16.5	SATISFACTORY

AT CODE D. COLATA	HEAT COLATA	ITEM POS.	MATERIAL MATERIALE	C %	Si %	Mn %	S %	P %	Cr %	Ni %	Mo %	Ti %	Cu %	V %	Nb %	N %	Al %	C.E. %	ORIGI ORIGIN
	31565.	0042	ASTM A350 LF2 CL1/2	0.190	0.250	1.100	0.010	0.012	0.110	0.060	0.010	0.015	0.180	0.021	0.001	0.000	0.025	0.417	EUROPE
	31565.	0037	ASTM A350 LF2 CL1/2	0.190	0.250	1.100	0.010	0.012	0.110	0.060	0.010	0.015	0.180	0.021	0.001	0.000	0.025	0.417	EUROPE
	33222	0093	ASTM A 105	0.190	0.260	0.970	0.014	0.020	0.120	0.060	0.010	0.009	0.160	0.000	0.000	0.000	0.005	0.392	EUROPE
	09/34191	0060	ASTM A 105	0.195	0.220	0.970	0.015	0.008	0.080	0.050	0.010	0.008	0.130	0.002	0.000	0.000	0.005	0.387	EUROPE
	76178	0002	ASTM A 105	0.210	0.240	0.990	0.013	0.012	0.070	0.060	0.010	0.006	0.180	0.001	0.000	0.000	0.023	0.407	EUROPE
	76178	0002	ASTM A 105	0.210	0.240	0.990	0.013	0.012	0.070	0.060	0.010	0.006	0.180	0.001	0.000	0.000	0.023	0.407	EUROPE

AT CODE D. COLATA	HEAT COLATA	ITEM POS.	TEST SPECIMEN mm² PROVETA SECTION Sezione	TEST SPECIMEN mm LENGHT Lunghezza	YIELD POINT Snervamento N/mm² ≥ 0,2 %	TENSILE STRENGHT Rottura N/mm² ≥	EL.ONGATION Allungamento % ≥	REDUCTION OF AREA Contrazione % ≥	HARDNESS Durezza Hb	BEND TEST Piega	FLATTENING TEST Schiacciam.	IMPACT TEST - Resilienza Joule / cm² U.M.	TYPE TIPO (10x10 mm)	°C	1	2	3	SHAPE FORMA 1 = ○ 2 = □	S	W	X	YIELD POINT SNERVAMENTO N/mm² ≥ 1,0 %	OI
	31565.	0042	126.60	50.80	383.0	534	30.0	58.0	163-165	0.0	0.0		KV	-50	67	60	65	1				0.0	
	31565.	0037	126.60	50.80	383.0	534	30.0	58.0	163-165	0.0	0.0		KV	-50	67	60	65	1				0.0	
	33222	0093	126.60	50.80	372.0	519	30.0	59.0	156-159	0.0	0.0		KV	20	80	86	86	1				0.0	
	09/34191	0060	126.60	50.80	369.0	524	30.0	58.0	159-163	0.0	0.0		KV	20	80	88	87	1				0.0	
	76178	0002	126.60	50.80	342.0	552	32.0	57.0	166-170	0.0	0.0		KV	20	88	88	86	1				0.0	
	76178	0002	126.60	50.80	342.0	552	32.0	57.0	166-170	0.0	0.0		KV	20	88	88	86	1				0.0	

AT CODE D. COLATA	HEAT COLATA	ITEM POS.	MATERIAL IN ACCORDANCE TO MATERIALE IN ACCORDO A	HEAT TREATMENT TRATTAMENTO TERMICO	
	31565.	0042	ASTM/ASME A 350/SA 350 M - 04a	NORMALIZED AT 930 C - COOLED IN STILL AIR	ELECTRIC FURNACE
	31565.	0037	ASTM/ASME A 350/SA 350 M - 04a	NORMALIZED AT 930 C - COOLED IN STILL AIR	ELECTRIC FURNACE
	33222	0093	ASTM/ASME A 105/SA 105 M - 05	NORMALIZED AT 920 C - COOLED IN STILL AIR	ELECTRIC FURNACE
	09/34191	0060	ASTM/ASME A 105/SA 105 M - 05	NORMALIZED AT 920 C - COOLED IN STILL AIR	ELECTRIC FURNACE
	76178	0002	ASTM/ASME A 105/SA 105 M - 05	NORMALIZED AT 920 C - COOLED IN STILL AIR	ELECTRIC FURNACE
	76178	0002	ASTM/ASME A 105/SA 105 M - 05	NORMALIZED AT 920 C - COOLED IN STILL AIR	ELECTRIC FURNACE

TE

ATERIAL IN ACCORDANCE WITH NACE MR-0175/2003

CE# 0 417323
CONFORMS TO ASME SEC II PART A
2007 EDITION 2007 ADDENDA
SIGNED
DATE Jun 4 /09

QUALITY CONTROL DEPARTMENT UFFICIO CONTROLLO QUALITÀ	INSPECTION AUTHORITY ENTE UFFICIALE COLLAUDO	MANUFACTURER'S SYMBOL MARCHIO PRODUZIONE
BRACCHI FLAVIO		MFF

6" CL 900 W/N FLANGE RF
SCH 160 BORE A350-LF2 CL 1

HEAT NUMBER : 508R8
TRANS AM PIPING PRODUCTS - REV'D BY: S
Shipment/Seq #: 9 - 1231 7

18378

CLIENTE / Customer / Client

TRANS AM PIPING PRODUCTS LTD.
9335 ENDEAVOR DRIVE S.E.
CALGARY, ALBERTA T3S 0A1
CANADA

CERTIFICADO DE INSPECCION

Inspection Certificate - Certificat de Réception

DIN EN 10204 / 3.1
ISO 10474 / 3.1

FECHA: Date: 14/04/2009 | N.º No. 127109 | HOJA: Page: 1

SGI 1922164 SGI 8000236

ULMA FORJA, S.COOP.
Bº Zubillaga, 3 - Apdo. 14
20560 OÑATI (Gipuzkoa) SPAIN
Tel.: 34 - 943 780552
Fax: 34 - 943 781808
E-mail: ulma@ulmapiping.com

72770

PRODUCTO / Article - Produit: FLANGES

SU PEDIDO N.º / Your Order No. / Votre Cde. N.º: PO# CI-09 - 156 (18.02.09)

DE / of. - de: 18/02/2009

Certified acc. PED 97/23/EC by TÜV Rheinland N.º 01 202 E/Q 02 7443

NORMAS APLICABLES / Requirements - Normes Applicables: ASME B16.5-03

MARCA DEL FABRICANTE / Mark of factory / Marque du fabricant

MATERIAL CORRESPONDIENTE / Material Correspondent - Qualité: A/SA350LF2CL1-07 ASTM/ASME

MODO DE FUSION (*) / Steel Making - Elaboration de l'acier: NACE MR-01-75/05 & MR-01-03/03

E = Elec. Y = Oxigeno básico

DEPARTAMENTO / Section / Département: QUALITY ASSURANCE

PARTIDA Item Poste	CANTIDAD Quantity Quantité	DESCRIPCION Description Description	LOTE	OBSERVACIONES (*) Remarks Observations	COLADA N.º Heat No N.ºCoulée	RESISTENCIA T.Strength Resist Rupt N/mm2	LIMITE ELAST. Y.Strength Limite Elast. N/mm2	ALARGAM. Elongation Allongement Lo: 4 d %	ESTRICCION Red. Area Striction %	RESILIENCIA Impact test Résilience Joules			CHARPY V PROBETA - SPÉCIMEN MEDIA Average Moyenne	°C	DUREZA Hardness Dureté HB
17		WN 6 900LB S160 RF A350LF2	939	NE	117V9	509	312	34,40	65,30	49	60	66	58	-50	148 155
17		WN 6 900LB S160 RF A350LF2	939	NE	508R8	507	347	31,90	67,90	134	163	120	139	-50	152 155

OK

COMPOSICION QUIMICA - STEEL MARKER'S LADLE ANALYSIS - ANALYSE CHIMIQUE

COLADA N.º Heat No N.ºCoulée	C %	Si %	Mn %	P %	S %	Cr %	Ni %	Mo %	Nb %	V %	Cu %	Al %	Ti %	N %	CEq %
117V9	0,210	0,300	0,840	0,012	0,001	0,150	0,100	0,070	0,007	0,001	0,330	0,028	0,000	0,000	0,423
508R8	0,150	0,260	1,210	0,010	0,003	0,070	0,060	0,020	0,020	0,040	0,150	0,028	0,000	0,000	0,392

- Las dimensiones y la condición superficial se hallaron satisfactorias.
- Dimension and surface condition were found acceptable.
- Les dimensions et état de surface sont satisfaisants.
- Los materiales citados cumplen las normas aplicables.
- [redacted] ordering requirements are satisfied.
- Les normes applicables sont respectées.

EL INSPECTOR
Works Inspector - L'Inspecteur

ULMA FORJA S. COOP.
Dpto. de Garantía de calidad
Quality Assurance Dept.

(*) OBSERVACIONES: *Remarks Observations*: N_NORMALIZED AT 900 C AND ALLOWED TO COOL IN STILL AIR

CF # 0.3844667
CONFORMS TO ASME SEC II PART A
2007 EDITION 2007 ADDENDA
SIGNED
DATE June 4 /07

HEAT NUMBER : 57712
TRANS AM PIPING PRODUCTS - REV'D BY: AB
Shipment/Seq #: S 9 - 1103 33

2X3-6 SCH 160 FS B/W PIPET
A350-LF2 CL 1

INTERNATIONAL
NUCLEAR PRODUCTS
Manufacturer of Piping and Pressure Vessel Components
4407 Haygood St - Houston, TX 77022
Phone: 713-695-3633 Fax: 713-695-3528
A Bonney Forge Company

Sold To: TRANS AM PIPING PRODUCTS
LTD
9335 ENDEAVOR DRIVE S.E.
CALGARY AB T3S 0A1

Mtr #: 166,509
PO #: CI-09-166
Sales Order #: C000902286 Date: 02/27/2009

This product has not come in direct contact with mercury or any of its compounds, nor with any mercury-containing device employing a single boundary of containment. No welding performed.
We certify that the contents of this report are correct and accurate, and that all test results and operations performed by WFI or its subcontractors are in compliance with the material specification and requirements of the referenced code or standard, and that the material conforms to the dimensional requirements of the order. This document is in accordance with EN10204 3.1.

Certified Material Test Report

Heat Code: 57712

Material: A/SA350 00a LF2 CL1

Item	Quantity	Description
26		6 - 3 X 2 S160 BWP A350LF2 CL1

Chemical Composition

Ladle	C	CR	CU	MN	MO	Nb	NI	P
	0.200	0.03	0.120	1.04	0.010	0.013	0.03	0.006
	S	SI	V					
	0.020	0.23	0.000					

Carbon Equivalency: Ladle 0.39

	Tensile PSI	Yield PSI	Elong %	RA %	Hardness	
Product	74,121	52,136	32.70	66.38	132 BHN	135 BHN

Charpy V-Notch Properties: Test Temperature: -50 F

FT LBS: 56/59/48 % Shear: NB/NB/NB MLE: NB/NB/NB

1. IN ACCORDANCE WITH NACE SPEC MR0175-2002

Normalized

CE # 0.391337

CONFORMS TO ASME SEC II PART A
2007 EDITION 2007 ADDENDA
SIGNED
DATE June 4 /09

Marie Dehmer
Quality Assurance Representative

18378

HEAT NUMBER : 56354
TRANS AM PIPING PRODUCTS - REV'D BY:
Shipment/Seq #: S 8 - 1240 48

2X3-6 SCH 160 FS B/W PIPET
A350-LF2 CL 1

INTERNATIONAL
NUCLEAR PRODUCTS
Manufacturer of Piping and Pressure Vessel Components
4407 Haygood St - Houston, TX 77022
Phone 713-695-3633 Fax 713-695-3528
A Bonney Forge Company

Sold To: TRANS AM PIPING PRODUCTS LTD
9335 ENDEAVOR DRIVE S.E.
CALGARY AB T3S 0A1

Mtr #: 150,044

PO #: CI-08-331

Sales Order #: C000806665 Date: 05/30/2008

This product has not come in direct contact with mercury or any of its compounds, nor with any mercury-containing device employing a single boundary of containment. No welding performed.
We certify that the contents of this report are correct and accurate, and that all test results and operations performed by WFI or its subcontractors are in compliance with the material specification and requirements of the referenced code or standard, and that the material conforms to the dimensional requirements of the order. This document is in accordance with EN10204 3.1.

Certified Material Test Report

Heat Code: 56354

Material: A/SA350 00a LF2 CL1

Item	Quantity	Description
51		6 - 3 X 2 S160 BWP A350LF2 CL1

Chemical Composition

Ladle	C	CR	CU	MN	MO	NB	NI	P
	0.210	0.05	0.140	1.22	0.011	0.000	0.04	0.010
	S	SI	V					
	0.022	0.23	0.014					

Carbon Equivalency: Ladle 0.44

Product	C	CR	CU	MN	MO	NB	NI	P
	0.000	0.00	0.000	0.00	0.000	0.000	0.00	0.000
	S	SI	V					
	0.000	0.00	0.000					

	Tensile PSI	Yield PSI	Elong %	RA %	Hardness	
Product	81,000	55,375	31.35	64.90	153 BHN	153 BHN

Charpy V-Notch Properties: Test Temperature: -50 F

FT LBS: 82/78/85 % Shear: NB/NB/NB MLE: NB/NB/NB

I. IN ACCORDANCE WITH NACE SPEC MR0175-2002

Normalized

CE# 0.4403333
CONFORMS TO ASME SEC II PART A
2007 EDITION 2007 ADDENDA
SIGNED
DATE JAS 4 /04

Marie Dehmer
Quality Assurance Representative

18578

HEAT NUMBER : 8I5633
TRANS AM PIPING PRODUCTS - REV'D BY:
Shipment/Seq #: S 9 - 1044 36

2" SCH 160 LR 90 BW ELBOW
A420-WPL6

INSPECTION CERTIFICATE

RIGID INDUSTRIES CO., LTD.

8, MEI-CHUNG RD. NIAO-SONG,
KAOHSIUNG HSIEN, 83301 TAIWAN
TEL: 886-77310527~8
FAX: 886-77315887

PURCHASER : SEYBOLD
STANDARD : ASTM A420 WPL6-07
ASME SA420 WPL6-04

MATERIALS : ASTM A333-6 (SEAMLESS PIPE)
INSP. SPEC. : ASME B16.9 - 03

DATE: 2009 - 02 - 03
ORDER NO: 8574/CI08547
P.I. NO: 8J02-2
CERTIFI. NO: 050

ACCORDING TO EN10204/DIN50049/3.1

ITEM NO.	PRODUCT & SIZE	QUANTITY PCS	MFG NO.	VISUAL & DIMENTIONAL INSPECTION	HARDNESS MAX. 197 HB	HEAT TREATMENT (NOTE)	MAGNETIC PARTICLE EXAMINATION	IMPACT TEST (J)
2	ELL 90 LR 2" WPL6 160		8I5633	GOOD OK	145 — 147	N		10 X 7.5 X 2V AT -45℃ 229.2 224.4 231.5 228.3

ITEM NO.	MATERIAL CHARGE NO.		CHEMICAL COMPOSITION %										PHYSICAL TEST			
			C x100	Si x100	Mn x100	P x1000	S x1000	Cu x100	Ni x100	Cr x100	Mo x100	V x100	Nb x1000	Y S KSI	T S KSI	E %	C.E. X100
	STANDARD	MIN.		15	60									35.0	60.0	30	
		MAX.	30	40	135	35	40	40	40	30	12	5	20		95.0		50
2	J7K7633		10	30	129	9	5	5	3	11	<1	<1	<1	48	69.6	61	31

(NOTE): A: HOT FORMED WITH FINAL TEMPERATURE BETWEEN 620℃-980℃,AIR COOLING.
N: NORMALIZING AT TEMPERATURE 880℃X0.5HR,AIR COOLING.
NACE MR-01-75-03/ISO15156.2 & NACE MR 0103-03 : SATISFACTORY

WE HEREBY CERTIFY THAT THE PRODUCT DESCRIBED HEREIN HAS BEEN MANUFACTURED IN ACCORDANCE WITH THE SPECIFICATIONS CONCERNED AND ALSO WITH THE PURCHASER'S REQUIREMENTS AND THAT THE TEST RESULTS SHOWN HEREIN ARE CORRECT.

CEH 0.315

Ou P Lan
MANAGER OF Q.A. DEPT.

CONFORMS TO ASME SEC II PART A
2007 EDITION 2007 ADDENDA
SIGNED
DATE Jun 4 '09

18378

2" SCH 160 BW TEE A420-WPL6

HEAT NUMBER : 7K1433
TRANS AM PIPING PRODUCTS - REV'D BY:
Shipment/Seq #: S 8 - 1247 63

INSPECTION CERTIFICATE

RIGID INDUSTRIES CO., LTD.

8, MEI-CHUNG RD. NIAO-SONG,
KAOHSIUNG HSIEN, 83301 TAIWAN
TEL: 886-77310527~8
FAX: 886-77315887

PURCHASER : SEYBOLD
STANDARD : ASTM A420 WPL6-07
ASME SA420 WPL6-04

MATERIALS : ASTM A333-6 (SEAMLESS PIPE)
INSP. SPEC. : ASME B16.9 - 03

DATE: 2008 - 06 - 04
ORDER NO: 6793/CI07378
P.I. NO: 7F04-6
CERTIFI. NO: 278

ACCORDING TO EN10204/DIN50049/3.1

ITEM NO.	PRODUCT & SIZE	QUANTITY PCS	MFG NO.	VISUAL & DIMENTIONAL INSPECTION	HARDNESS MAX. 197 HB	HEAT TREATMENT (NOTE)	MAGNETIC PARTICLE EXAMINATION	IMPACT TEST (J)
1	TEE 2" WPL6 160		7K1433	GOOD	163 — 172 OK	N	GOOD	10 X 5 X 2V AT -45℃ 146.2 148.9 150.1 148.4

ITEM NO.	MATERIAL CHARGE NO.		CHEMICAL COMPOSITION %										PHYSICAL TEST			
			C x100	Si x100	Mn x100	P x1000	S x1000	Cu x100	Ni x100	Cr x100	Mo x100	V x100	Nb x1000	Y S KSI	T S KSI	E %	C.E. X100
	STANDARD	MIN.		15	60									35.0	60.0	30	
		MAX.	30	40	135	35	40	40	40	30	12	5	20		95.0		50
1	J7K7633		10	30	129	9	5	5	3	11	<1	<1	<1	48	69.6	61	31

(NOTE): A: HOT FORMED WITH FINAL TEMPERATURE BETWEEN 620℃-980℃,AIR COOLING.
N: NORMALIZING AT TEMPERATURE 880℃X0.5HR,AIR COOLING.
NACE MR-01-75-03/ISO15156.2 & NACE MR 0103-03 : SATISFACTORY

WE HEREBY CERTIFY THAT THE PRODUCT DESCRIBED HEREIN HAS BEEN MANUFACTURED IN ACCORDANCE WITH THE SPECIFICATIONS CONCERNED AND ALSO WITH THE PURCHASER'S REQUIREMENTS AND THAT THE TEST RESULTS SHOWN HEREIN ARE CORRECT.

CEH 0.315

Ou C Lan
MANAGER OF Q.A. DEPT.

CONFORMS TO ASME SEC II PART A
2007 EDITION 2007 ADDENDA
SIGNED
DATE 5 Jun 4 /09

18378

CONFORMS TO ASME SEC II PART A
2007 EDITION 2008 ADDENDA
SIGNED
DATE June 21 09

CE# 0.3795334 (MC)

4" CL 150 W/N FLANGE RF STD
BORE A105N

HEAT NUMBER : 76172
TRANS AM PIPING PRODUCTS - REV'D BY:
Shipment/Seq #: S 9 - 1276 1

METALFAR

PRODOTTI INDUSTRIALI S.P.A.
23861 CESANA BRIANZA (LC) ITALY
Tel. 031.655441 - Fax 031.655149
MATERIAL TEST DEPARTMENT
SALA PROVE ED ANALISI MATERIALI

COMPANY WITH QUALITY MANAGEMENT SYSTEM CERTIFIED BY DNV = ISO 9001 : 2000 =

TRANS AM PIPING PRODUCTS LTD
9335 ENDEAVOR DRIVE S.E.
CALGARY-ALBERTA T3S 0 A1

INSPECTION CERTIFICATE EN 10204/3.1

CERTIFICATO DI COLLAUDO

N.: 1695/ 30/04/2009
INVOICE / *FATTURA*: 1267/ 30/04/2009
S.: 58168
DEL. NOTE / *BOLLA*: 2182/ 30/04/2009

PAG.: 3

HEAT CODE *COD. COLATA*	HEAT *COLATA*	ITEM *POS.*	YOUR P.O. *VS. ORDINE*	OUR REFERENCE *NS. ORDINE*	QUANTITY *QUANTITÀ*	DESCRIPTION *DESCRIZIONE*	DIM. ACCORDANCE TO *DIM. IN ACCORDO A*	VISUAL & DIMENSIONAL *VISIVO E DIMENSIONALE*
	26750.	0042	C109-155	09000560 0052		WN 2500RTJ 4"XXS SQ.CUT LF2CL1	ASME/ANSI B16.5	SATISFACTORY
	26750.	0042	C109-155	09000560 0052		WN 2500RTJ 4"XXS SQ.CUT LF2CL1	ASME/ANSI B16.5	SATISFACTORY
	76172	0004	C109-225	09001193 0014		W/N 150 RF 4" STD A105	ASME/ANSI B16.5	SATISFACTORY
	76172	0004	C109-225	09001193 0014		W/N 150 RF 4" STD A105	ASME/ANSI B16.5	SATISFACTORY
	697296	0015	C109-225	09001193 0025		W/N 300 RF 8" XS A105	ASME/ANSI B16.5	SATISFACTORY
	31657	0016	C109-225	09001193 0026		W/N 300 RF 4" 160 A105	ASME/ANSI B16.5	SATISFACTORY

HEAT CODE *COD COLATA*	HEAT *COLATA*	ITEM *POS.*	MATERIAL *MATERIALE*	C %	Si %	Mn %	S %	P %	Cr %	Ni %	Mo %	Ti %	Cu %	V %	Nb %	N %	Al %	C.E. %	ORIGIN *ORIGINE*
	26750.	0042	ASTM A350 LF2 CL1/2	0.170	0.230	1.120	0.006	0.012	0.050	0.070	0.010	0.001	0.170	0.001	0.002	0.000	0.020	0.384	EUROPE
	26750.	0042	ASTM A350 LF2 CL1/2	0.170	0.230	1.120	0.006	0.012	0.050	0.070	0.010	0.001	0.170	0.001	0.002	0.000	0.020	0.384	EUROPE
	76172	0004	ASTM A 105	0.180	0.210	1.000	0.014	0.011	0.070	0.070	0.020	0.005	0.150	0.001	0.000	0.000	0.029	0.379	EUROPE
	76172	0004	ASTM A 105	0.180	0.210	1.000	0.014	0.011	0.070	0.070	0.020	0.005	0.150	0.001	0.000	0.000	0.029	0.379	EUROPE
	697296	0015	ASTM A 105	0.193	0.235	1.130	0.013	0.006	0.036	0.031	0.007	0.002	0.037	0.002	0.001	0.000	0.029	0.394	EUROPE
	31657	0016	ASTM A 105	0.195	0.240	1.020	0.015	0.019	0.120	0.060	0.010	0.007	0.190	0.003	0.001	0.000	0.010	0.408	EUROPE

HEAT CODE *COD. COLATA*	HEAT *COLATA*	ITEM *POS.*	TEST SPECIMEN mm² PROVETTA: SECTION *Sezione*	TEST SPECIMEN mm: LENGHT *Lunghezza*	YIELD POINT *Snervamento* N/mm² ≥ 0,2 %	TENSILE STRENGHT *Rottura* N/mm² ≥	ELONGATION *Allungamento* % ≥	REDUCTION OF AREA *Contrazione* % ≥	HARDNESS *Durezza* Hb	BEND TEST *Prova*	FLATTENING TEST *Schiacciam.*	IMPACT TEST - Resilienza Joule / cm² U.M.	TYPE *TIPO* (J or J pcs)	°C	1	2	3	SHAPE *FORMA* 1 = ○ 2 = □	S	W	X	YIELD POINT *SNERVAMENTO* N/mm² ≥ 1,0 %	OUR. REF
	26750.	0042	126.60	50.80	361.0	505	31.0	56.0	153-156	0.0	0.0		KV	-50	66	68	62	1				0.0	
	26750.	0042	126.60	50.80	361.0	505	31.0	56.0	153-156	0.0	0.0		KV	-50	66	68	62	1				0.0	
	76172	0004	126.60	50.80	330.0	531	33.0	58.0	163-165	0.0	0.0		KV	20	85	88	80	1				0.0	
	76172	0004	126.60	50.80	330.0	531	33.0	58.0	163-165	0.0	0.0		KV	20	85	88	80	1				0.0	
	697296	0015	126.60	50.80	329.0	536	30.0	61.0	163-165	0.0	0.0		KV	20	80	86	85	1				0.0	
	31657	0016	126.60	50.80	360.0	528	30.0	58.0	159-163	0.0	0.0		KV	20	86	86	88	1				0.0	

HEAT CODE *COD. COLATA*	HEAT *COLATA*	ITEM *POS.*	MATERIAL IN ACCORDANCE TO *MATERIALE IN ACCORDO A*	HEAT TREATMENT *TRATTAMENTO TERMICO*
	26750.	0042	ASTM/ASME A 350/SA 350 M - 04a	NORMALIZED AT 930 C - COOLED IN STILL AIR ELECTRIC FURNACE
	26750.	0042	ASTM/ASME A 350/SA 350 M - 04a	NORMALIZED AT 930 C - COOLED IN STILL AIR ELECTRIC FURNACE
	76172	0004	ASTM/ASME A 105/SA 105 M - 05	NORMALIZED AT 920 C - COOLED IN STILL AIR ELECTRIC FURNACE
	76172	0004	ASTM/ASME A 105/SA 105 M - 05	NORMALIZED AT 920 C - COOLED IN STILL AIR ELECTRIC FURNACE
	697296	0015	ASTM/ASME A 105/SA 105 M - 05	NORMALIZED AT 920 C - COOLED IN STILL AIR ELECTRIC FURNACE
	31657	0016	ASTM/ASME A 105/SA 105 M - 05	NORMALIZED AT 920 C - COOLED IN STILL AIR ELECTRIC FURNACE

NOTE

MATERIAL IN ACCORDANCE WITH NACE MR-0175/2003

QUALITY CONTROL DEPARTMENT *UFFICIO CONTROLLO QUALITÀ*	INSPECTION AUTHORITY *ENTE UFFICIALE COLLAUDO*	MANUFACTURER'S SYMBOL *MARCHIO PRODUZIONE*
BRACCHI FLAVIO		MFF

18378

OK

METALFAR

PRODOTTI INDUSTRIALI S.P.A.
23861 CESANA BRIANZA (LC) ITALY
Tel. 031.655441 - Fax 031.655149
MATERIAL TEST DEPARTMENT
SALA PROVE ED ANALISI MATERIALI

COMPANY WITH QUALITY MANAGEMENT SYSTEM CERTIFIED BY DNV = ISO 9001 : 2000 =

TRANS AM PIPING PRODUCTS LTD
9335 ENDEAVOR DRIVE S.E.
CALGARY-ALBERTA T3S 0 A1

INSPECTION CERTIFICATE EN 10204/3.1 — *CERTIFICATO DI COLLAUDO*

N.: 558/ 13/02/2008
INVOICE / *FATTURA:* 410/ 12/02/2008
S.: 53050
DEL. NOTE / *BOLLA:* 767/ 12/02/2008

PAG.: 1

4" CL 900 W/N FLANGE RF
SCH 160 BORE A105N

T CODE / COLATA	HEAT / COLATA	ITEM / POS.	YOUR P.O. / VS. ORDINE	OUR REFERENCE / NS. ORDINE	QUANTITY / QUANTITÀ	DESCRIPTION / DESCRIZIONE		DIML ACCORDANCE TO / DIM. IN ACCORDO A	VISUAL & DIMENSIONAL / VISIVO E DIMENSIONALE
	35750	0101	CI07-369	07001942 0108		BLIND 1500 RTJ 3"	A105	ASME/ANSI B16.5	SATISFACTORY
	74366.	0014	CI07-509	07002863 0041		W/N 600 RF 1" 160	LF2CL1	ASME/ANSI B16.5	SATISFACTORY
	683494	0062	CI08-124	08000298 0070		W/N 900 RF 4" 160	A105	ASME/ANSI B16.5	SATISFACTORY
	38979	0028	CI07-650	07003986 0036		W/N 600 RF 4" XS	A105	ASME/ANSI B16.5	SATISFACTORY
	38979	0028	CI07-650	07003986 0036		W/N 600 RF 4" XS	A105	ASME/ANSI B16.5	SATISFACTORY
	38979	0043	CI08-124	08000298 0051		W/N 600 RF 4" XS	A105	ASME/ANSI B16.5	SATISFACTORY

T CODE / COLATA	HEAT / COLATA	ITEM / POS.	MATERIAL / MATERIALE	C %	Si %	Mn %	S %	P %	Cr %	Ni %	Mo %	Ti %	Cu %	V %	Nb %	N %	Al %	C.E. %	ORIGIN / ORIGIN
	35750	0101	ASTM A 105	0.185	0.210	1.100	0.013	0.011	0.110	0.060	0.010	0.019	0.170	0.021	0.000	0.000	0.028	0.411	EUROPE
	74366.	0014	ASTM A350 LF2 CL1/2	0.185	0.210	1.110	0.014	0.015	0.120	0.050	0.010	0.020	0.150	0.023	0.000	0.000	0.026	0.413	EUROPE
	683494	0062	ASTM A 105	0.200	0.235	1.130	0.013	0.011	0.083	0.025	0.007	0.002	0.050	0.001	0.001	0.008	0.031	0.411	EUROPE
	38979	0028	ASTM A 105	0.180	0.220	0.950	0.017	0.013	0.140	0.060	0.010	0.008	0.150	0.003	0.002	0.000	0.010	0.382	EUROPE
	38979	0028	ASTM A 105	0.180	0.220	0.950	0.017	0.013	0.140	0.060	0.010	0.008	0.150	0.003	0.002	0.000	0.010	0.382	EUROPE
	38979	0043	ASTM A 105	0.180	0.220	0.950	0.017	0.013	0.140	0.060	0.010	0.008	0.150	0.003	0.002	0.000	0.010	0.382	EUROPE

T CODE / COLATA	HEAT / COLATA	ITEM / POS.	TEST SPECIMEN mm PROVETTA SECTION / Sezione	TEST SPECIMEN mm LENGHT / Lunghezza	YIELD POINT / Snervamento N/mm² ≥ 0,2%	TENSILE STRENGHT / Rottura N/mm²	ELONGATION / Allungamento %	REDUCTION OF AREA / Contrazione %	HARDNESS / Durezza Hb	BEND TEST / Piega	FLATTENING TEST / Schiacciam.	IMPACT TEST - Resilienza Joule / cm² U.M.	TYPE / TIPO (10x10 mm)	°C	1	2	3	SHAPE / FORMA 1=⊖ 2=□	S	W	X	YIELD POINT / SNERVAMENTO N/mm² ≥ 1,5%	OUI
	35750	0101	126.60	50.80	378.0	527	28.0	59.0	159-163	0.0	0.0		KV	20	83	86	83	1				0.0	
	74366.	0014	126.60	50.80	340.0	550	32.0	59.0	166-170	0.0	0.0		KV	-50	63	66	63	1				0.0	
	683494	0062	126.60	50.80	326.0	534	31.0	59.0	163-165	0.0	0.0		KV	20	86	88	88	1				0.0	
	38979	0028	126.60	50.80	338.0	508	33.0	60.0	152-156	0.0	0.0		KV	20	88	87	88	1				0.0	
	38979	0028	126.60	50.80	338.0	508	33.0	60.0	152-156	0.0	0.0		KV	20	88	87	88	1				0.0	
	38979	0043	126.60	50.80	338.0	508	33.0	60.0	152-156	0.0	0.0		KV	20	88	87	88	1				0.0	

T CODE / COLATA	HEAT / COLATA	ITEM / POS.	MATERIAL IN ACCORDANCE TO / MATERIALE IN ACCORDO A	HEAT TREATMENT / TRATTAMENTO TERMICO
	35750	0101	ASTM/ASME A 105/SA 105 M - 05	NORMALIZED AT 920 C - COOLED IN STILL AIR ELECTRIC FURNACE
	74366.	0014	ASTM/ASME A 350/SA 350 M - 04a	NORMALIZED AT 930 C - COOLED IN STILL AIR ELECTRIC FURNACE
	683494	0062	ASTM/ASME A 105/SA 105 M - 05	NORMALIZED AT 920 C - COOLED IN STILL AIR ELECTRIC FURNACE
	38979	0028	ASTM/ASME A 105/SA 105 M - 05	NORMALIZED AT 920 C - COOLED IN STILL AIR ELECTRIC FURNACE
	38979	0028	ASTM/ASME A 105/SA 105 M - 05	NORMALIZED AT 920 C - COOLED IN STILL AIR ELECTRIC FURNACE
	38979	0043	ASTM/ASME A 105/SA 105 M - 05	NORMALIZED AT 920 C - COOLED IN STILL AIR ELECTRIC FURNACE

HEAT NUMBER : 683494
TRANS AM PIPING PRODUCTS - REV'D BY: S
Shipment/Seq #: S 8 - 1051 9

NOTE
MATERIAL IN ACCORDANCE WITH NACE MR-0175/2003

CONFORMS TO ASME SEC II PART A
2007 EDITION 2008 ADDENDA
SIGNED
DATE June 2/09

CE# 0.4115333

QUALITY CONTROL DEPARTMENT / UFFICIO CONTROLLO QUALITÀ	INSPECTION AUTHORITY / ENTE UFFICIALE COLLAUDO	MANUFACTURER'S SYMBOL / MARCHIO PRODUZIONE
BRACCHI FLAVIO		MFF

18578

INSPECTION CERTIFICATE

(MILL TEST)

CHUP HSIN ENTERPRISE CO., LTD.
17, TUNG LI ROAD HSIAO KANG
KAOHSIUNG, TAIWAN R.O.C.
TEL:(07) 831-9157-9
FAX:(07) 831-2942 , 821-7500

Customer: TRANS AM PIPING PRODUCTS LTD.
Product : SEAMLESS STEEL PIPE FITTING
Spec : ASTM/ASME/SA234 WPB-00 [DIN 50049/3.1B]EN 10204.3.1B

Certificate No: 09500007-0209
Order No : CI-06-124
Date : 2006/5/22

Specification for Raw Material	Specification for Inspection	Visual Examiation	Dimensional Inspection
ASTM A106 GR.B	ASME B16.9-2001	GOOD	GOOD

Item	Description	Quantity	Heat ID.	Heat No.	Raw Material Mfg	Raw Certificate NO
94	CON RED XS 3 X 2	300	0542	J5K0542	SUMITOMO	BYYL3024
95	CON RED XS 4 X 2	50	0491	J5K0491	SUMITOMO	BYYL3025
97	CON RED XS 4 X 3	200	0491	J5K0491	SUMITOMO	BYYL3025
98	CON RED XS 6 X 3	50	5210	J4L5210	SUMITOMO	BYYF4301
99	CON RED XS 10 X 6	15	2345	J012345	SUMITOMO	BYYF1075
100	CON RED XS 12 X 6	5	3210	J2K3210	SUMITOMO	WYYM1934
101	CON RED STD/XS 3 X 2	200	9388	J5K9388	SUMITOMO	BYYL2212
102	CON RED STD/XS 4 X 2	50	2315	J5K2315	SUMITOMO	BYYL2914
103	CON RED XS/STD 10 X 6	5	2345	J012345	SUMITOMO	BYYF1075
104	ECC RED XS 3 X 1 1/2	10	9388	J5K9388	SUMITOMO	BYYL2212

Specification	Chemical Composition %												Tension Test			HARDNESS TEST	Heat Treatment	Magnetic Particle Exam.	Remark
	C	Si	Mn	P	S	Cu	Ni	Cr	Mo	V	Nb	C.E.	Y.S	T.S	E				
	×100	×100	×100	×1000	×1000	×100	×100	×100	×100	×1000	×1000	×100	P.S.I	P.S.I	%	HB			
MIN		10	29										35000	60000	30				
MAX	30		106	50	58	40	40	40	15	80	20	50		85000		197			
94	20	25	57	8	2	10	4	3	1	0	0	31	45000	69400	41	141	S.R. 650°Cx0.5		
95	19	24	56	10	3	9	4	3	1	0	0	30	42700	66900	41	139	HR		
97	19	24	56	10	3	9	4	3	1	0	0	30	42700	66900	41	139			
98	16	24	68	15	8	3	3	4	3	0	0	29	50700	73800	42	130			
99	16	22	69	10	9	10	5	4	1	0	<2	30	40600	68500	42	132			
100	20	24	69	19	7	4	3	3	1	0	0	33	43500	68100	44	133			
101	18	22	57	11	10	7	2	8	2	0	0	30	47800	69400	41	135			
102	19	26	66	17	9	5	4	3	3	0	0	32	47000	68500	40	136			
103	16	22	69	10	9	10	5	4	1	0	<2	30	40600	68500	42	132			
104	18	22	57	11	10	7	2	8	2	0	0	30	47800	69400	41	135			

C.E.=C+MN/6+(CR+MO+V)/5+(NI+CU)/15

We hereby certify that the product described herein has manufactured in accordance with the speciticafions concerned and also with the purchaser's requirements and that the test results shown herein are correct.

L. S. Tsai
Chief of Quality Assurance Section

CONFORMS TO ASME SEC II PART A
2007 EDITION 2008 ADDENDA
SIGNED
DATE June 2/09

CE# 0.295

HEAT NUMBER : 2315
TRANS AM PIPING PRODUCTS - REV'D BY:
Shipment/Seq #: S 6 - 1301 102

4 X 2 STD/XH BW CONC REDUCER A234-WPB

18378

OK

INSPECTION CERTIFICATE

TO EN10204 3.1

BKL
Thai Benkan Co., Ltd.
58 Soi Watkrunai, Bangkru, Prapadaeng,
Samutprakarn, 10130 Thailand.

Purchaser : TRANS-AM PIPING PRODUCTS LTD.

E-No.	Purchase Order No.	Job No.	D M Y Certificate No.
MB-310	CI-08-164		18/08/2008 T- 2008180101

No.		MFG. No. (Heat Identification No.)	Specification for Material Made from Seamless Pipe		Specification for Inspection	Visual Examination	Dimensional Inspec
			ASTM A234-06a/ASME SA234-04 Gr WPB CSA Z245.11 Gr 241 CAT I NACE MR0175/ISO 15156 . 2003		ASME B16.9-2003	Good	Good
			Product & Size (T:*1)	Quantity	Heat Treatment (Note 1)	Hardness Actual Data	
1		51B10109-5	T WPB 3 X 2 STD/XS		N	HB : 115 - 145	
2		51B10110-1	T WPB 4 X 2 STD/XS		N	HB : 120 - 135	
3		51B10111	T WPB 6 X 4 STD/XS		N	HB : 115 - 145	
4		51B10111-1	T WPB 6 X 4 STD/XS		N	HB : 115 - 145	
5							

Specification		Chemical Composition %												Tension Test *2			
		C	Si	Mn	P	S	Cu	Ni	Cr	Mo	V	Nb	C.E.	YS	TS	E	
Min .		x 100	x 100	x 100	x 1000	x 1000	x 100	x 100	x 100	x 100	x 1000	x 1000	x 100	MPa.		%	HARDNESS MAX
Max .			10	29										240	415	30	197 HB : GOOD
Material Heat No.		30		106	50	58	40	40	40	15	80	20			655		
1	J7KA557	11	23	130	9	4	1	2	11	0	0	1	35	327	466	40	
2	J8L3888	19	23	87	12	6	1	2	6	2	0	0	35	349	502	39	
3	2-43255	19	26	85	16	5	<1	1	3	<1	1	<1	34	304	496	41	
4	J7K8552	11	26	128	8	5	3	2	12	0	0	0	35	319	460	44	
5																	

(Note 1) A : Hot formed with final temperature between 620 °C-980°C, Air Cooling N : Normalizing 910°Cx0.5 HR. Air Cooling *N : Normalizing 910°Cx0.5 HR. Air Cooling (Specification for material made from plate) S : Stress Relieving 675° Cx0.5 HR. Air Co

THE RESULTS OF THE TEST AND INSPECTIONS MEET THE REQUIREMENTS.

C.E. = C+Mn/6+(Cr+Mo+V)/5+(Ni+Cu)/15 MAGNETIC PARTICLE EXAMINATION FOR TEE ONLY

We hereby certify that the product described herein has been manufactured in accordance with the specifications checked and also with the purchaser's requirements and that the test results shown herein are correct.

CONFORMS TO ASME SEC II PART A
2007 EDITION 2008 ADDENDA
SIGNED
DATE June 2/09

Quality Assurance Manager
Thai Benkan Co., Ltd.

CE# 0.353

* 1 : "T" symbolized wall thickness in mm. * 2 : YS Yield strength TS = Tensile strength E = Elongation
Form TZ-6A/2

HEAT NUMBER : 51B10110-1
TRANS AM PIPING PRODUCTS - REV'D BY:
Shipment/Seq #: S 8 - 1367 15

4 X 2 STD/XH BW RED TEE A234-WPB

18378

INSPECTION CERTIFICATE

RIGID INDUSTRIES CO., LTD.
8. MEI-CHUNG RD. NIAO-SONG,
KAOHSIUNG HSIEN, 83301 TAIWAN
TEL: 886-77310527~8
FAX: 886-77315887

PURCHASER : SEYBOLD
STANDARD : ASTM A420 WPL6-06 / ASME SA420 WPL6-92
MATERIALS : ASTM A333-6 (SEAMLESS PIPE)
INSP. SPEC. : ASME B16.9 - 03

DATE: 2006 - 11 - 22
ORDER NO: 5833/C06490
P.I. NO: 6F13-1
CERTIFI. NO: 617

ACCORDING TO EN10204/DIN50049/3.1

ITEM NO.	PRODUCT & SIZE	QUANTITY PCS	MFG NO.	VISUAL & DIMENTIONAL INSPECTION	HARDNESS MAX. 197 HB	HEAT TREATMENT (NOTE)	MAGNETIC PARTICLE EXAMINATION	IMPACT TEST (J)
48	RED-TEE 6X4" WPL6 160		6H2825	GOOD	136 — 162	N	GOOD	10 X 7.5 X 2V AT -45℃ 154.8 134.3 166.6 151.9

ITEM NO.	MATERIAL CHARGE NO.		CHEMICAL COMPOSITION % C x100	Si x100	Mn x100	P x1000	S x1000	Cu x100	Ni x100	Cr x100	Mo x100	V x100	Nb x1000	PHYSICAL TEST YS KSI	TS KSI	E %	C.E. X100
	STANDARD	MIN.		15	60									35.0	60.0	30	
		MAX.	30	30	135	35	40	40	40	30	12	5	20		95.0		50
48	J4LC225		11	24	128	11	4	1	2	10	1	0	0	43.2	65.8	52.7	32

(NOTE): A: HOT FORMED WITH FINAL TEMPERATURE BETWEEN 620℃-980℃,AIR COOLING.
N: NORMALIZING AT TEMPERATURE 880℃X0.5HR,AIR COOLING.
NACE MR-01-75 & NACE MR 0103 : SATISFACTORY

WE HEREBY CERTIFY THAT THE PRODUCT DESCRIBED HEREIN HAS BEEN MANUFACTURED IN ACCORDANCE WITH THE SPECIFICATIONS CONCERNED AND ALSO WITH THE PURCHASER'S REQUIREMENTS AND THAT THE TEST RESULTS SHOWN HEREIN ARE CORRECT.

Ou L Lan
MANAGER OF Q.A. DEPT.

CF#0.323333
CONFORMS TO ASME SEC II PART A
2021 EDITION 2008 ADDENDA
SIGNED
DATE June 4/06

HEAT NUMBER : 6H2825
TRANS AM PIPING PRODUCTS - REV'D BY:
Shipment/Seq #: S 6 - 1668 50

6 X 4 SCH 160 BW RED TEE
A420-WPL6

18578

HEAT NUMBER : 7H4978
TRANS AM PIPING PRODUCTS - REV'D BY:
Shipment/Seq #: S 8 - 1247 72

4X2 SCH 160 BW CONC REDUCER
A420-WPL6

INSPECTION CERTIFICATE

RIGID INDUSTRIES CO., LTD.
8, MEI-CHUNG RD. NIAO-SONG,
KAOHSIUNG HSIEN, 83301 TAIWAN
TEL: 886-77310527~8
FAX: 886-77315887

PURCHASER : SEYBOLD
STANDARD : ASTM A420 WPL6-07
ASME SA420 WPL6-04

MATERIALS : ASTM A333-6 (SEAMLESS PIPE)
INSP. SPEC. : ASME B16.9 - 03

ACCORDING TO EN10204/DIN50049/3.1

DATE: 2008 - 06 - 04
ORDER NO: 7530/CI08102
P.I. NO: 8A01-2
CERTIFI. NO: 284

ITEM NO.	PRODUCT & SIZE	QUANTITY PCS	MFG NO.	VISUAL & DIMENTIONAL INSPECTION	HARDNESS MAX. 197 HB	HEAT TREATMENT (NOTE)	MAGNETIC PARTICLE EXAMINATION	IMPACT TEST (J)
3	CON-RED 4X2"WPL6 160	[redacted]	7H4978	GOOD	137 — 144	N		10 X 10 X 2V AT -45℃ 193.4 200.2 194.1 195.9

ITEM NO.	MATERIAL CHARGE NO.		CHEMICAL COMPOSITION %											PHYSICAL TEST			
			C x100	Si x100	Mn x100	P x1000	S x1000	Cu x100	Ni x100	Cr x100	Mo x100	V x100	Nb x1000	Y S KSI	T S KSI	E %	C.E. X100
	STANDARD	MIN.		15	60									35.0	60.0	30	
		MAX.	30	40	135	35	40	40	40	30	12	5	20		95.0		50
3	J6L4978		12	28	134	13	3	2	3	12	1	<1	<1	46.3	67.2	47.7	34

(NOTE): A: HOT FORMED WITH FINAL TEMPERATURE BETWEEN 820℃-980℃,AIR COOLING.
N: NORMALIZING AT TEMPERATURE 880℃X0.5HR,AIR COOLING.
NACE MR-01-75-03/ISO15156.2 & NACE MR 0103-03 : SATISFACTORY
WE HEREBY CERTIFY THAT THE PRODUCT DESCRIBED HEREIN HAS BEEN MANUFACTURED IN ACCORDANCE WITH THE SPECIFICATIONS CONCERNED AND ALSO WITH THE PURCHASER'S REQUIREMENTS AND THAT THE TEST RESULTS SHOWN HEREIN ARE CORRECT.

Ou C Lan
MANAGER OF Q.A. DEPT.

CONFORMS TO ASME SEC II PART A
2007 EDITION 2008 ADDENDA
SIGNED
DATE June 2 '09

CE# 0.3746667

18378

4" SCH 160 LR 90 BW ELBOW
A420-WPL6

HEAT NUMBER : 8B1357
TRANS AM PIPING PRODUCTS - REV'D BY:
Shipment/Seq #: S 9 - 1085 20

INSPECTION CERTIFICATE

RIGID INDUSTRIES CO., LTD.
8, MEI-CHUNG RD, NIAO-SONG,
KAOHSIUNG HSIEN, 83301 TAIWAN
TEL: 886-77310527~8
FAX: 886-77315887

PURCHASER : SEYBOLD
STANDARD : ASTM A420 WPL6-07 / ASME SA420 WPL6-04
MATERIALS : ASTM A333-6 (SEAMLESS PIPE)
INSP. SPEC. : ASME B16.9 - 03

DATE: 2009 - 02 - 18
ORDER NO: 7000482/CG9714
P.I. NO: 8K01-1
CERTIFI. NO: 077

ACCORDING TO EN10204/DIN50049/3.1

ITEM NO.	PRODUCT & SIZE	QUANTITY PCS	MFG NO.	VISUAL & DIMENTIONAL INSPECTION	HARDNESS MAX. 197 HB	HEAT TREATMENT (NOTE)	MAGNETIC PARTICLE EXAMINATION	IMPACT TEST (J)
7	ELL 90 LR 4" WPL6	160	8B1357	GOOD	135 — 144	N		10 X 10 X 2V AT -45℃ 194.0 200.7 196.2 196.9

ITEM NO.	MATERIAL CHARGE NO.		CHEMICAL COMPOSITION %											PHYSICAL TEST			
			C x100	Si x100	Mn x100	P x1000	S x1000	Cu x100	Ni x100	Cr x100	Mo x100	V x100	Nb x1000	Y S KSI	T S KSI	E %	C.E. X100
	STANDARD	MIN.		15	60									35.0	60.0	30	
		MAX.	30	40	135	35	40	40	40	30	12	5	20		95.0		50
7	J7KA557		11	23	130	9	4	1	2	11	<1	<1	1	45	67.9	49.6	32

(NOTE): A: HOT FORMED WITH FINAL TEMPERATURE BETWEEN 820℃-980℃,AIR COOLING.
N: NORMALIZING AT TEMPERATURE 880℃X0.5HR,AIR COOLING.
NACE MR-01-75-03/ISO15156.2 & NACE MR 0103-03 : SATISFACTORY

WE HEREBY CERTIFY THAT THE PRODUCT DESCRIBED HEREIN HAS BEEN MANUFACTURED IN ACCORDANCE WITH THE SPECIFICATIONS CONCERNED AND ALSO WITH THE PURCHASER'S REQUIREMENTS AND THAT THE TEST RESULTS SHOWN HEREIN ARE CORRECT.

Ou C Lan
MANAGER OF Q.A. DEPT.

CONFORMS TO ASME SEC II PART A
2007 EDITION 2008 ADDENDA
SIGNED
DATE June 2 '09

CE# 0.3546667

Sic S.A.I.C
Dr. A. Simini 250
(B2804MHA) Campana
Buenos Aires, Argentina
(54) 3489 433100 tel
(54) 3489 433405 fax

#33331 1 #21t21 18378

SA 333 GR 6

INSPECTION CERTIFICATE

(EN 10204 3.1B - ISO 10474 3.1B)

4" S/160

OK

Cliente / Customer	Expediente/ Manufacturing Order	Número / Number	Fecha / Date	Pág./Page
VAN LEEUWEN CANADA	5/7887.06	216102	03/08/2004	1 / 6

Producto / Product	Orden de Compra/ Purchase Order	Item	Referencia del Cliente / Customer Reference
Seamless steel line pipe	PO 45029439	00006	

Norma / Standard	Grado / Grade	Extremos / Ends
ASTM A333/ASME SA333 + CSA Z245.1	1&6+290/II	BEVELLED AT 30 DEG. ASTM

Dimensiones / Dimensions	Schedule	Peso Nominal / Nominal Weight	Longitud / Length	Superficie Externa / External Surface	Cantidades / Quantities
114.30 x 13.49 mm 4 1/2 x 0.531 inches	160	33.54 KG/MT 22.51 LB/FT	11.6/13.7 m	VARNISHED Tk. 0.515"	48 Pz 577.55 m 19076 Kg 48 Pcs 1894.85 Ft 42055 Lb

ENSAYOS DE TRACCION / TENSILE TEST

Colada	N° de Ensayo	Condición de la probeta						Temp de Ens	Dimensiones	Sección	Fluencia / Yield Strength						Rotura/U.T.S			Relación F/R		Alargamiento Elongation			Red. de area		Dureza / Hardness Tipo / type: BHN				
											Offset Method		EUL Method									Lo								
Heat	Test N°	Specimen condition						Test Temp	Size	Area	Req. Min 0.2%	V. obt.	EUL.	Req. Min	V. obt.	Req. Max	Req. Min	V. obt.	Req. Max	YS/UTS Ratio		2"	Req. Min	V. obt	Area Red.		Req. Min	V. Obt.			Req. Max
		Zona Zone	Estado	Ext.	N° P/T	Tipo Type	Ori	°C	Inches	Inchs2	Ksi		%	Ksi			Ksi			Req. Max	Obt	mm	%		Req. Min	%				
[redacted]	442213	C/B	PRO			ST	L	TA/RT	1,008 X 0,536	0,547			0.5	42	61.0		60	76.1				50.8	40.2	46.8				171			237
33331	442244	C/B	PRO			ST	L	TA/RT	1,043 X 0,511	0,540			0.5	42	64.2		60	79.3				50.8	40.2	44.2				194			237
33331	442259	C/B	PRO			ST	L	TA/RT	1,004 X 0,520	0,528			0.5	42	60.6		60	78.1				50.8	40.2	44.4				178			237
33331	442261	C/B	PRO			ST	L	TA/RT	1,004 X 0,540	0,548			0.5	42	60.9		60	77.4				50.8	40.2	44.3				187			237
33331	446166	C/B	PRO			ST	L	TA/RT	0,996 X 0,546	0,550			0.5	42	63.1		60	78.7				50.8	40.2	41.7				182			237
33331	446600	C/B	PRO			ST	L	TA/RT	0,992 X 0,528	0,529			0.5	42	63.8		60	78.7				50.8	40.2	40.4				197			237

TEST TECNOLOGICO / TECHNOLOGICAL TEST						NOTA / NOTE:
Aplastamiento Flattening Test	Curvado Bend test	Abocardado Flaring Test	Pestañado Flange Test	Ens. De anillo expandido Ring expanding Test	Ens. De Tracción de anillo Ring tensile Test	
Satisfact.	N.A	N.A	N.A	N.A	N.A	

Pro = Proceso/ Process
N = Normalizada/ Normalized
DIST = Distensionada / Stress Relief
Q & T = Templado y Revenido/ Quenched & Tempered
TA/RT = Temp. Ambiente/ Room Temperature

RE = Rectangular
CI = Cilíndrica/ Cylindrical
ST = Segmento Tubular / Tubular segmen
TU = Transversal

C/B = Cuerpo / Body
R/U = Recalque / Upset
P / A = Promedio / Average
Min = Mínimo / minimum
Max = Máximo / Maximum

L = Longitudinal
T = Transversal
P/T = Tubo/ Pipe
EXT = Extremo/ End
M = Medio/ Middle

V.Obt. = Valor Obtenido / Obtained value
E = Comienzo de marcación/ Stencilling starting
O = Extremo opuesto al E/ Opposite extreme to E

CALI 17504

CONFORMS TO ASME SEC II PART A
2007 EDITION 2008 ADDENDA
SIGNED
DATE June 2 /09

54

CE# 0.527

tenaris

INSPECTION CERTIFICATE

(EN 10204 3.1B - ISO 10474 3.1B)

CONFORMS TO ASME SEC II PART A
20 04 EDITION 20 05 ADDENDA
SIGNED
DATE Jan 10/07

Siderca S.A.I.C
Dr J. A. Simini 250
(B2804MHA) Campana
Buenos Aires, Argentina
(54) 3489 433100 tel
(54) 3489 433405 fax

Cliente / Customer	Expediente/ Manufacturing Order	Número / Number	Fecha / Date	Pág./Page
VAN LEEUWEN CANADA	5/7887.06	216102	03/08/2004	2 / 6

Producto / Product	Orden de Compra/ Purchase Order	Item	Referencia del Cliente / Customer Reference
Seamless steel line pipe	PO 45029439	00006	

Norma / Standard	Grado / Grade	Extremos / Ends
ASTM A333/ASME SA333 + CSA Z245.1	1&6+290/II	BEVELLED AT 30 DEG. ASTM

Dimensiones / Dimensions	Schedule	Peso Nominal / Nominal Weight	Longitud / Length	Superficie Externa / External Surface	Cantidades / Quantities
114.30 x 13.49 mm	160	33.54 KG/MT	11.6/13.7 m	VARNISHED	48 Pz 577.55 m 19076 Kg
4 1/2 x 0.531 inches		22.51 LB/FT			48 Pcs 1894.85 Ft 42055 Lb

ENSAYOS QUIMICOS / CHEMICAL ANALYSES

			%	%	%	%	%	%	%	%	%	%	%	%	%	%	%	%	%	%	%	%	%	%	%	%	%	%	%	%	%	%	%	%	%	%			
			C	Si	Mn	Cr	Mo	W	Cd	P	S	Ni	V	Al	Sn	Cu	As	Nb	Ti	Pb	Sb	Co	Zr	Bi	Ca	B	N	O	Mg	H	C.e 1	C.e 2	Pcm	Sum 1	Sum 2	Sum 3	R 1	R 2	R 3
			x 100							x 1000													x 10000							*	x 100			x 1000					
Colada	Heat	Max	26	50	135					25	25		110					110	110							10					40	40		1000					
Heat		Min		10	40																																3.0		
Ensayo	Prod	Max	26	50	135					25	25		110					110	110							10					40	40		1000					
Test		Min		10	40																																3.0		
33331	Heat		13	27	108	3	2	0		10	2	39	2	24	5	60	3	20	2	1	1	7	10	4	22	1	32		1		33	29		161			8.3	e E327.	
(442213)	Prod		13	27	107	3	2	0		10	2	42	1	26	4	59	1	19	3	1	1	6	10	4	21	1	36		1		33	28		152			8.2		
(442244)	Prod		13	27	107	3	2	0		10	2	42	1	25	4	58	1	19	3	1	1	6	10	4	21	1	32		1		33	28		151			8.2		
(442259)	Prod		13	26	107	3	3	0		9	2	40	1	25	4	58	2	19	3	1	1	7	10	4	21	1	37		1		33	29		159			8.2		
(442261)	Prod		13	25	108	3	2	0		10	2	42	1	25	4	59	1	19	2	1	1	6	10	4	21	1	35		1		33	29		152			8.3		
(446166)	Prod		12	26	106	4	3			10	1	41	1	24	3	55	2	20	3	1	1	5	10	1	24	1	30		3		32	27		167			8.8		
(446600)	Prod		12	26	106	4	3			10	1	40	1	25	4	58	2	18	3	1	1	5	10	1	22	1	30		4		32	27		169			8.8		

NOTAS / NOTES: H = Análisis de colada / Heat Analysis. P = Análisis de producto / Product Analysis C.e = Carbono Equivalente/Equivalent Carbon R = Ratio * = PPM / Part per million

CEQ 1 = C+(MN/6)+(CR+MO+V)/5+(NI+CU)/15	CEQ 2 = C+F((MN/6)+(SI/24)+(CU/15)+(NI/20)+(CR+MO+V+NB)/5+(5*B))	PCM =
Sum 1 = CR+CU+MO+NI+V	SUM 2 =	SUM 3 =
R 1 = MN/C	R 2 =	R 3 =

CALI 175/04

Sir S.A.I.C
Dr , A. Simini 250
(B2804MHA) Campana
Buenos Aires, Argentina
(54) 3489 433100 tel
(54) 3489 433405 fax

INSPECTION CERTIFICATE

(EN 10204 3.1B - ISO 10474 3.1B)

Cliente / Customer	Expediente/ Manufacturing Order	Número / Number	Fecha / Date	Pág./Page
VAN LEEUWEN CANADA	5/7887.06	216102	03/08/2004	3 / 6

Producto / Product	Orden de Compra/ Purchase Order	Item	Referencia del Cliente / Customer Reference
Seamless steel line pipe	PO 45029439	00006	

Norma / Standard	Grado / Grade	Extremos / Ends
ASTM A333/ASME SA333 + CSA Z245.1	1&6+290/II	BEVELLED AT 30 DEG. ASTM

Dimensiones / Dimensions	Schedule	Peso Nominal / Nominal Weight	Longitud / Length	Superficie Externa / External Surface	Cantidades / Quantities
114.30 x 13.49 mm	160	33.54 KG/MT	11.6/13.7 m	VARNISHED	48 Pz 577.55 m 19076 Kg
4 1/2 x 0.531 Inches		22.51 LB/FT			48 Pcs 1894.85 Ft 42055 Lb

ENSAYOS DE IMPACTO / IMPACT TEST

Colada Heat	Ensayo Test	Condición de la probeta / Specimen condition					Energía Absorbida / Absorbed Energy.									Area ductil / Shear Area (%)						Expansión Lateral/Lateral Exp. (Mils)					
		Zona Zone	Metodo Method	Entalla Notch	Dimensiones Size Inches	Orient. Orient.	Temper. °C Req.	Temper. °C T/E	Unidad Unit	Req. Min	Req. P/A	V.Obt/Obtained Values Sample N° 1	2	3	Min	P/A	Req. Min	Req. P/A	V.Obt/Obtained Values Sample N° 1	2	3	Min	P/A	Req. Min	Req. P/A	V.Obt./Obtained Values Sample N° 1	2	3	Min	P/A
33331	442213	C/B	CHARPY	V	0,394 x 0,263	T	-45	-45	Joules	0.0	18.0	162.0	200.0	172.0	162.0	178.0		85.0	100.0	100.0	100.0	100.0	100.0						
33331	442213	C/B	CHARPY	V	0,394 x 0,394	L	-45	-45	Joules	14.0	18.0	258.0	287.0	296.0	258.0	280.3													
33331	442244	C/B	CHARPY	V	0,394 x 0,263	T	-45	-45	Joules	0.0	18.0	178.0	158.0	176.0	158.0	170.7		85.0	100.0	100.0	100.0	100.0	100.0						
33331	442244	C/B	CHARPY	V	0,394 x 0,394	L	-45	-45	Joules	14.0	18.0	281.0	275.0	318.0	275.0	291.3													
33331	442259	C/B	CHARPY	V	0,394 x 0,263	T	-45	-45	Joules	0.0	18.0	208.0	278.0	200.0	200.0	228.7		85.0	100.0	100.0	100.0	100.0	100.0						
33331	442259	C/B	CHARPY	V	0,394 x 0,394	L	-45	-45	Joules	14.0	18.0	296.0	306.0	290.0	290.0	297.3													
33331	442261	C/B	CHARPY	V	0,394 x 0,263	T	-45	-45	Joules	0.0	18.0	176.0	162.0	158.0	158.0	165.0		85.0	100.0	100.0	100.0	100.0	100.0						
33331	442261	C/B	CHARPY	V	0,394 x 0,394	L	-45	-45	Joules	14.0	18.0	297.0	268.0	293.0	268.0	286.0													
33331	446166	C/B	CHARPY	V	0,394 x 0,394	L	-45	-45	Joules	14.0	18.0	283.0	305.0	273.0	283.0	280.3													
33331	446166	C/B	CHARPY	V	0,394 x 0,263	T	-45	-45	Joules	0.0	18.0	145.0	167.0	153.0	145.0	151.7		85.0	100.0	100.0	100.0	100.0	100.0						
33331	446600	C/B	CHARPY	V	0,394 x 0,394	L	-45	-45	Joules	14.0	18.0	284.0	295.0	297.0	284.0	292.0													
33331	446600	C/B	CHARPY	V	0,394 x 0,263	T	-45	-45	Joules	0.0	18.0	153.0	148.0	155.0	148.0	152.0		85.0	100.0	100.0	100.0	100.0	100.0						

NOTE: Req = Requisitos / Requirements C/B = Cuerpo / Body R/U = Recalque / Upset Orient = Orientación / Orientation V = Valor / Value P/A = Promedio / Average Min = Mínimo / Minimum T/E = Temp. Ens. / Test Temp.

CALI 17504

Tenaris

rca S.A.I.C
E. Jorge A. Simini 250
(B2804MHA) Campana
Buenos Aires, Argentina
(54) 3489 433100 tel
(54) 3489 433405 fax

INSPECTION CERTIFICATE

(EN 10204 3.1B - ISO 10474 3.1B)

Cliente / Customer	Expediente/ Manufacturing Order	Número / Number	Fecha / Date	Pág./Page
VAN LEEUWEN CANADA	5/7887.06	216102	03/08/2004	5 / 6

Producto / Product	Orden de Compra/ Purchase Order	Item	Referencia del Cliente / Customer Reference
Seamless steel line pipe	PO 45029439	00006	

Norma / Standard	Grado / Grade	Extremo / Ends
ASTM A333/ASME SA333 + CSA Z245.1	1&6+290/II	BEVELLED AT 30 DEG. ASTM

Dimensiones / Dimensions	Schedule	Peso Nominal / Nominal Weight	Longitud / Length	Superficie Externa / External Surface	Cantidades / Quantities
114.30 x 13.49 mm 4 1/2 x 0.531 inches	160	33.54 KG/MT 22.51 LB/FT	11.6/13.7 m	VARNISHED	48 Pz 577.55 m 19076 Kg 48 Pcs 1894.85 Ft 42055 Lb

CONDICIONES DEL MATERIAL	*MATERIAL CONDITIONS*
-NO REPARADO POR SOLDADURA.	-NO REPAIR BY WELDING.
PROPIEDADES DEL MATERIAL	*MATERIAL PROPERTIES*
-LA DUREZA CUMPLE CON LA NORMA NACE MR 01-75 ULTIMA EDICION.	-HARDNESS ACCORDING TO NACE MR-01-75 LATEST EDITION.
-EL MATERIAL CUMPLE CON LOS REQUISITOS DE ASTM A530/A530M EDICION 98.	-MATERIAL ACCORDING TO REQUIREMENTS OF ASTM A530/A530M EDITION 98.
NORMAS	*STANDARDS*
-CERTIFICADO DE ACUERDO CON: EN 10204 3.1.B/95 - ISO 10474 3.1.B/92.	-CERTIFICATE ACCORDING TO : EN 10204 3.1.B/95 - ISO 10474 3.1.B/92.
-EDICION DE LA NORMA : ASME SA 333/01.	-EDITION OF REGULATION: ASME SA 333/01.
-EDICION DE LA NORMA : NACE MR-01-75 ULTIMA EDICION	-EDITION OF REGULATION: NACE MR-01-75 LATEST EDITION
-EDICION DE LA NORMA: CSA Z245.1/98.	-EDITION OF REGULATION: CSA Z245.1/98.
-EDICION DE LA NORMA : ASTM A333/99.	-EDITION OF REGULATION: ASTM A333/99.

Observaciones / Remarks

HYDROSTATIC TEST PRESSURE: 211 Kg/Cm2 = 3000 PSI (5 sec.).

HEAT TREATMENT: QUENCHED & TEMPERED.
QUENCH MEDIA OF HEAT TREATING PROCESS: WATER

NON DESTRUCTIVE TEST: SATISFACTORY.
INSPECTION METHODS: U.T. LONG.(EXT.) NOTCH 5%
U.T. LONG.(INT.) NOTCH 10%
U.T. TRANSV. (EXT./INT.) NOTCH 10%.

HARDNESS ACCORDING TO NACE MR-01-75 LATEST EDITION.

Tenaris

ca S.A.I.C
Dr. Jorge A. Simini 250
(B2804MHA) Campana
Buenos Aires, Argentina
(54) 3489 433100 tel
(54) 3489 433405 fax

INSPECTION CERTIFICATE

(EN 10204 3.1B - ISO 10474 3.1B)

Cliente / Customer	Expediente/ Manufacturing Order	Número / Number	Fecha / Date	Pág./Page
VAN LEEUWEN CANADA	5/7887.06	216102	03/08/2004	6 / 6

Producto / Product	Orden de Compra/ Purchase Order	Item	Referencia del Cliente / Customer Reference
Seamless steel line pipe	PO 45029439	00006	

Norma / Standard	Grado / Grade	Extremo / Ends
ASTM A333/ASME SA333 + CSA Z245.1	1&6+290/II	BEVELLED AT 30 DEG. ASTM

Dimensiones / Dimensions	Schedule	Peso Nominal / Nominal Weight	Longitud / Length	Superficie Externa / External Surface	Cantidades / Quantities
114.30 x 13.49 mm	160	33.54 KG/MT	11.6/13.7 m	VARNISHED	48 Pz 577.55 m 19076 Kg
4 1/2 x 0.531 inches		22.51 LB/FT			48 Pcs 1894.85 Ft 42055 Lb

IMPACT TEST ACCORDING TO ASTM A370.

ONE YELLOW LONGITUDINAL STRIPE FULL LENGTH.

ONE ORANGE BAND.

Por la presente certificamos que el material aquí descripto ha sido fabricado de acuerdo con las normas y especificaciones solicitadas en vuestra orden y satisfacen los correspondientes requerimientos.	We hereby certify that material herein described has been manufactured in accordance with the standards and specifications required in your order and satisfies the corresponding requirements.
Este certificado se emite mediante un sistema computarizado y es valido con firma electrónica.El certificado original presenta el logo Tenaris (verde claro), impreso en la parte inferior de la hoja. En caso que el poseedor del certificado entregue una copia del mismo, deberá garantizar la conformidad con el original, haciéndose responsable por cualquier uso ilegal o indebido.	This certificate is issued by a computerized system and it is valid with electronic signature. On the original certificate the trade-mark Tenaris light-green coloured at the bottom of the page is stamped. In case the owner of the certificate would release a copy of it, he must attest its conformity to the original one taking upon himself the responsibility for any unlawful or not allowed use.
Cualquier alteración y / o falsificación estará sujeta a la ley. Si necesita asegurar la autenticidad de este certificado, contactarse con Siderca SAIC, e-mail: aye@siderca.com	Any alteration and / or falsification will be subject to the law. If you need to assure the authenticity of this certificate, please do not hesitate to contact Siderca SAIC through this e-address:aye@siderca.com

QUALITY CERTIFICATION DEPT.
DTO CERTIFICACION DE CALIDAD
EDUARDO A. AYERBE

CALI 17564

6" 5/160
333-6
21725
18378

Tenaris

INSPECTION CERTIFICATE

(BS EN 10204 3.1: 2004 - ISO 10474 3.1B: 1991)

SIDERCA S.A.I.C.
Dr Jorge A. Simini 250
(B2804MHA) Campana
Buenos Aires, Argentina

(54) 3489 433100 tel.
(54) 3489 433405 fax

Cliente / Customer	Expediente/ Manufacturing Order	Número / Number	Fecha / Date	Pág./Page
VAN LEEUWEN CANADA	5/1243.06	335417	09/08/2006	1 / 6

Producto / Product	Orden de Compra/ Purchase Order	Item	Referencia del Cliente / Customer Reference
CARBON STEEL FOR SERVICES AT LOW TEMPERA	45000383	00006	45000383

Norma / Standard	Grado / Grade	Extremos / Ends
ASTM A333/ASME SA333 CSA Z245.1-02*CANADA TENARIS P4.18-01/00 OCT 24,2003	1&6+290/II	BEVELLED AT 30 DEG. ASTM

Dimensiones / Dimensions	Schedule	Peso Nominal / Nominal Weight	Longitud / Length	Superficie Externa / External Surface	Cantidades / Quantities
168.30 x 18.26 mm 6 5/8 x 0.719 inches	160	67.56 KG/MT 45.35 LB/FT	DR (SP)	VARNISHED	25 Pz 331.39 m 22255 Kg 25 Pcs 1087.24 Ft 49064 Lb

.752. 211

ENSAYOS DE TRACCION / TENSILE TEST

Colada	Nº de Ensayo	Condición de la probeta						Temp de Ens	Dimensiones	Sección	Fluencia / Yield Strength						Rotura/U.T.S			Relación F/R		Alargamiento Elongation			Red. de area		Dureza / Hardness Tipo / type: BHN		
		Specimen condition						Test Temp	Size	Area	Offset Method		EUL Method							YS/UTS Ratio		Lo 2"			Area Red.				
Heat	Test Nº	Zona Zone	Estado	Ext.	Nº P/T	Tipo Type	Orl	°C	Inches	Inchs2	Req. Min 0.2% Ksi	V. obt. Ksi	EUL %	Req. Min Ksi	V. obt. Ksi	Req. Max Ksi	Req. Min Ksi	V. obt. Ksi	Req. Max Ksi	Req. Max	Obt.	mm	Req. Min %	V. obt %	Req. Min %	%	Req. Min	V. Obt.	Req. Max
81135	558447	C/B	PRO			ST	L	TA/RT	0,964 X 0,738	0,730			0.5	42	61.1		60	74.5				50.8	29.2	42.9				176	237
81135	558549	C/B	PRO			ST	L	TA/RT	0,986 X 0,719	0,712			0.5	42	57.1		60	73.9				50.8	29.2	42.4				176	237
81135	558551	C/B	PRO			ST	L	TA/RT	0,983 X 0,726	0,718			0.5	42	59.1		60	75.6				50.8	29.2	42.1				177	237

TEST TECNOLOGICO / TECHNOLOGICAL TEST

Aplastar / Flattening	Abocard / Flaring	Ens. De Tracción / Ring tensile Test
Satisfactory	N/A	N/A

NOTA / NOTE:

Pro = [illegible] PWHT = [illegible] Treatment
N = [illegible]
DIST = [illegible] Stress Relief
Q & T = [illegible] Quenched
TA/RT = [illegible] Room Temperature

RE = [illegible]
CI = [illegible]
ST = [illegible]

C/B = [illegible] Body
R/U = [illegible] / Upset
P/A = [illegible] / Average
Min = [illegible] Minimum
Max = [illegible] Maximum

L = Longitudinal
T = Transversal
P/T = Tubo/ [illegible]
EXT = Extremo [illegible]
M = Medio/ [illegible]

V.Obt. = Valor Obtenido / Obtained value
E = Comienzo de marcación/ Stenciling starting
O = Extremo opuesto al E/ Opposite extreme to E
C/H = Ensayos en Caliente / Hot Testing

CONFORMS TO ASME SEC II PART
2007 EDITION 2008 ADDENDA
SIGNED
DATE June 2/09

CE# 03219333

57

Tenaris

CONFORMS TO ASME SEC II PART A
20 04 EDITION 2006 ADDENDA
SIGNED [signature]
DATE Aug 02/07.

SIDERCA S.A.I.C.
Dr Jorge A. Simini 250
(B2804MHA) Campana
Buenos Aires, Argentina

(54) 3489 433100 tel.
(54) 3489 433405 fax

INSPECTION CERTIFICATE

(BS EN 10204 3.1: 2004 - ISO 10474 3.1B: 1991)

Cliente / Customer	Expediente/ Manufacturing Order	Número / Number	Fecha / Date	Pág./Page
VAN LEEUWEN CANADA	5/1243.06	335417	09/08/2006	2 / 6

Producto / Product	Orden de Compra/ Purchase Order	Item	Referencia del Cliente / Customer Reference
CARBON STEEL FOR SERVICES AT LOW TEMPERA	45000383	00006	45000383

Norma / Standard	Grado / Grade	Extremos / Ends
ASTM A333/ASME SA333 CSA Z245.1-02*CANADA TENARIS P4.18-01/00 OCT 24,2003	1&6+290/II	BEVELLED AT 30 DEG. ASTM

Dimensiones / Dimensions	Schedule	Peso Nominal / Nominal Weight	Longitud / Length	Superficie Externa / External Surface	Cantidades / Quantities
168.30 x 18.26 mm 6 5/8 x 0.719 inches	160	67.56 KG/MT 45.35 LB/FT	DR (SP)	VARNISHED	25 Pz 331.39 m 22255 Kg 25 Pcs 1087.24 Ft 49064 Lb

ENSAYOS QUIMICOS / CHEMICAL ANALYSES

			%	%	%	%	%	%	%	%	%	%	%	%	%	%	%	%	%	%	%	%	%	%	%	%	%	%	%	%	%	%	%	%	%	%			
			C	Si	Mn	Cr	Mo	W	Cd	P	S	Ni	V	Al	Sn	Cu	As	Nb	Ti	Pb	Sb	Co	Zr	Bi	Ca	B	N	O	Mg	H	C.e 1	C.e 2	Pcm	Sum 1	Sum 2	Sum 3	R 1	R 2	R 3
			x 100							x 1000													x 10000							*	x 100			x 1000					
Colada	Heat	Max	25	50	135					25	25		110					30	110							10					40	40		1000					
Heat		Min		10	40													15																			3.0		
Ensayo	Prod	Max	25	50	135					25	25		110					30	110							10					40	40		1000					
Test		Min		10	40													15																			3.0		
81135	Heat		13	25	104	4	3	0		10	1	18	2	28	5	45	2	17	3	1	1	6	10	9	18	1	37		[illegible]	[illegible]	[illegible]	28		135			8.0		
(558447)	Prod		13	25	101	4	2	0		11	2	19	1	28	5	38	1	18	3	1	1	2	10	1	18	1	34		[illegible]	[illegible]	[illegible]	28		118			7.7		
(558549)	Prod		14	26	104	4	2	0		9	2	18	1	26	6	42	2	18	3	1	4	3	10	1	13	1	38		4		33	30		121			7.4		
(558551)	Prod		14	27	105	5	2	0		10	2	18	4	31	6	49	2	20	4	1	6	3	10	1	14	1	40		8		33	30		141			7.5		

ct# 3442.

NOTAS / NOTES: [illegible] Análisis de colada [illegible] P = Análisis de producto / Product Analysis [illegible] Carbono Equivalente/Equivalent Carbon [illegible] R = Ratio * = PPM / Part per million

CEQ 1 = [illegible] MO+V)/5+[illegible] | CEQ 2 = [illegible] ((MN/6)+(SI/24)[illegible]CR+MO+V+NB)/5+(5*B)) | PCM [illegible]

Sum 1 = [illegible] | SUM 2 [illegible] | SUM 3 [illegible]

R 1 = [illegible]

Tenaris

INSPECTION CERTIFICATE

(BS EN 10204 3.1: 2004 - ISO 10474 3.1B: 1991)

SIDERCA S.A.I.C.
Dr Jorge A. Simini 250
(B2804MHA) Campana
Buenos Aires, Argentina

(54) 3489 433100 tel.
(54) 3489 433405 fax

Cliente / Customer	Expediente/ Manufacturing Order	Número / Number	Fecha / Date	Pág./Page
VAN LEEUWEN CANADA	5/1243.06	335417	09/08/2006	6 / 6

Producto / Product	Orden de Compra/ Purchase Order	Item	Referencia del Cliente / Customer Reference
CARBON STEEL FOR SERVICES AT LOW TEMPERA	45000383	00006	45000383

Norma / Standard	Grado / Grade	Extremo / Ends
ASTM A333/ASME SA333 CSA Z245.1-02*CANADA TENARIS P4.18-01/00 OCT 24,2003	1&6+290/II	BEVELLED AT 30 DEG. ASTM

Dimensiones / Dimensions	Schedule	Peso Nominal / Nominal Weight	Longitud / Length	Superficie Externa / External Surface	Cantidades / Quantities
168.30 x 18.26 mm 6 5/8 x 0.719 Inches	160	67.56 KG/MT 45.35 LB/FT	DR (SP)	VARNISHED	25 Pz 331.39 m 22255 Kg 25 Pcs 1087.24 Ft 49064 Lb

Por la p[illegible]ue el material aquí descripto ha sido fabricado de acue[illegible] especificaciones solicitadas en vuestra [illegible] y satisfa[illegible]tes requerimientos.	We [illegible] material herein [illegible]nufactured in accordance [illegible] specifications [illegible] and satisfies the [illegible]ments.	
Este cer[illegible]ante un sistema [illegible] firma ele[illegible] original pres[illegible] Impreso [illegible] la hoja. En [illegible] certificado entregu[illegible], deberá [illegible]dad con el original, [illegible]ble por [illegible]ndebido.	[illegible] by a compute[illegible] valid with electronic signature. On [illegible] the trade-ma[illegible] coloured at the bottom of the pag[illegible] the owner of [illegible] release a copy of it, he must att[illegible] original one [illegible] the responsibility for any [illegible]use.	
Cualqui[illegible]ficación [illegible] Si neces[illegible]cidad de [illegible] con Siderca [illegible]derca.com	[illegible]sification wi[illegible] authenticity [illegible] do not [illegible]a SAIC throu[illegible]@siderca.com	QUALITY CERTIFICATION DEPT. DTO CERTIFICACION DE CALIDAD EDUARDO A. AYERBE

1" SCH 80

MS-18378

3/4" → 11321601

1" → 11325666

Contract No.: 2110000785
L/C NO.: 8FAHD5-00364
Name of Customer: CE FRANKLIN
P.O.NO.: PO.2054939-OR-2100-A
DESCRIPTION: SEAMLESS CARBON STEEL PIPE FOR OIL AND GAS USE
TOTAL: 1994PIECES, 16BUNDLES, 38.443MT, 39880FT

HENGYANG VALIN STEEL TUBE CO., LTD

OK

MILL TEST REPORT

Date: SEP. 1, 2008 (Revised date: NOV. 13, 2008)

Page: 1/2

Add: 10 Dalixincun, Hengyang City, Hunan, China
Tel and Fax: +86 734 8873739 8872942
Cable 6993
P.C. 421001

SPEC: ASTM A53B-2007/A106B-2006a, ASME SA53B/SA106B-2004, API 5LB, PSL1-2004, NACE MR-0175-2003

CERTIFICATE NO 08-1-09-4

NO.	BATCH NO.	HEAT NO.	STEEL GRADE	SIZE	BUNDLES	PIECES	FEET	QUANTITY (MT)	ACTUAL WEIGHT(MT)
1	588700008	08105799-2	B	3/4" * 0.154" * 20FT	1	157	3140	2.108	N/A
2	588100578	08205841-2	B	1" * 0.179" * 20FT	3	381	7620	7.536	N/A
	588100579	08205852-2	B	1" * 0.179" * 20FT	9	1143	22860	22.608	N/A
	588100578	08205841-2	B	1" * 0.179" * 20FT	3	313	6260	6.191	N/A

NO.	DELIVERY CONDITION	NONDESTRUCTIVE TEST		CHEMICAL COMPOSITION %													
		ET	UT	C	SI	Mn	P	S	Cu	Ni	Cr	Mo	V	Ti	B	Nb	CE
1	COLD-DRAWN(780℃)	OK	N/A	0.21	0.27	0.53	0.009	0.011	0.02	0.01	0.03	0.01	0.01	0.002	0.0001	0.001	0.310
2	COLD-DRAWN(780℃)	OK	N/A	0.19	0.27	0.53	0.009	0.012	0.03	0.01	0.03	0.01	0.01	0.002	0.0001	0.001	0.291
	COLD-DRAWN(780℃)	OK	N/A	0.20	0.27	0.53	0.009	0.011	0.03	0.01	0.03	0.01	0.01	0.002	0.0001	0.001	0.301
	COLD-DRAWN(780℃)	OK	N/A	0.19	0.27	0.53	0.009	0.012	0.03	0.01	0.03	0.01	0.01	0.002	0.0001	0.001	0.291

NO	b (PSI) TENSILE STRENGTH	s (PSI) YIELD STRENGTH	(% ELONGATION	IMPACT TEST				HARDNESS	HYDROSTATIC TEST	FLATTEN TEST	BEND TEST
	Full ,L, Lo=50mm			Temp	Dime(mm)	AKV (J)	Orientation				
1	69600	45675	41	N/A	N/A	N/A	N/A	HRC<22	850PSI	N/A	OK
2	71775	50025	32.5	N/A	N/A	N/A	N/A	HRC<22	850PSI	N/A	OK
	70325	45675	42.5	N/A	N/A	N/A	N/A	HRC<22	850PSI	N/A	OK
	Full ,L, Lo=50mm										
	71775	50025	32.5	N/A	N/A	N/A	N/A	HRC<22	850PSI	N/A	OK

REMARKS
1. We hereby certify that the material has been manufactured, sampled, tested and inspected in accordance with the required standards.
2. Properties compliance to DIN 50049 3.1.B /UNI EN 10204 3.1B
3. BRINELL /Rockwell hardness certified to NACE MR-0175-2003
4. SPECIMEN SIZE (Pipe end, Longitudinal, Gauge Length=2")
   A. For pipes 1" full length specimen were used;
   B. For pipes 1" longitudinal strip specimen were used, the gauge length portion is 3/4".
5. Origin: Made in China.
6. MATERIALS CONFIRM TO ANSI B36.10

QUALITY MANAGER:

HENGYANG VALIN STEEL TUBE CO., LTD HUNAN CHINA

CONFORMS TO ASME SEC II PART A
2007 EDITION 2008 ADDENDA
SIGNED
DATE March 11/09

CE# 0.301

CONFORMS TO ASME SEC II PART A
2007 EDITION 2008 ADDENDA
SIGNED
DATE mar 11/09

CE# 0.291

The information contained in this drawing is the confidential property of Platinum Energy Services Corp. No part thereof shall be reproduced or communicated to a third party without written authorization from Platinum Energy Services Corp.

P-220
METHANOL PUMP

TEXSTREAM 2500 TRIPLEX METHANOL PUMP
3-HEAD MODEL 25F13 C/W 1/4" PLUNGERS
HIGH PRESSURE BUNA PACKING C/W BUNA O-RINGS
0.5 HP, 1800 RPM, 230-460V/3PH/60HZ XP MOTOR
OUTPUT RANGE FOR ONE(1) HEAD IS 0.29 TO 2.71 LITRES/HOUR
TOTAL OUTPUT RANGE OF THREE(3) HEADS IS 0.87 TO 8.13 LITRES/HOUR
MAX DISCHARGE PRESSURE IS 4000 PSIG

P-230
CORROSION INHIBITOR PUMP

TEXSTEAM SINGLE HEAD CHEMICAL INHIBITOR INJECTION PUMP
SINGLE HEAD MODEL TEX25G41AMW68 C/W 3/16" PLUNGER
SDP-1000 PACKING C/W FLUOROSILICONE O-RINGS
0.5 HP, 1800 RPM, 230-460V/3 PH/60 HZ XP MOTOR
OUTPUT RANGE FOR ONE(1) HEAD IS 1.92 TO 18.96 LITRES/DAY
MAX DISCHARGE PRESSURE IS 6000 PSIG

UH-200
ELECTRIC HEATER

MODEL: RUFFNECK
7.5 KW F X 5-480-075
ELECTRIC HEATER EX PROOF
12" FAN 1/4" H.P.
ELECTRIL MOTOR c/w THERMOSTAT

EF-200A/B
EXHAUST FANS

6AC/HR
1/4 HP/120 VAC/1PH/ 60 HZ, EX PROOF
c/w THREMOSTAT & HOA

V-250

HORIZONTAL INSTRUMENT AIR VOLUME TANK
30 GALLON MAWP 200 PSI
REGISTERED IN AB, BC, SASK, MAN, ONT

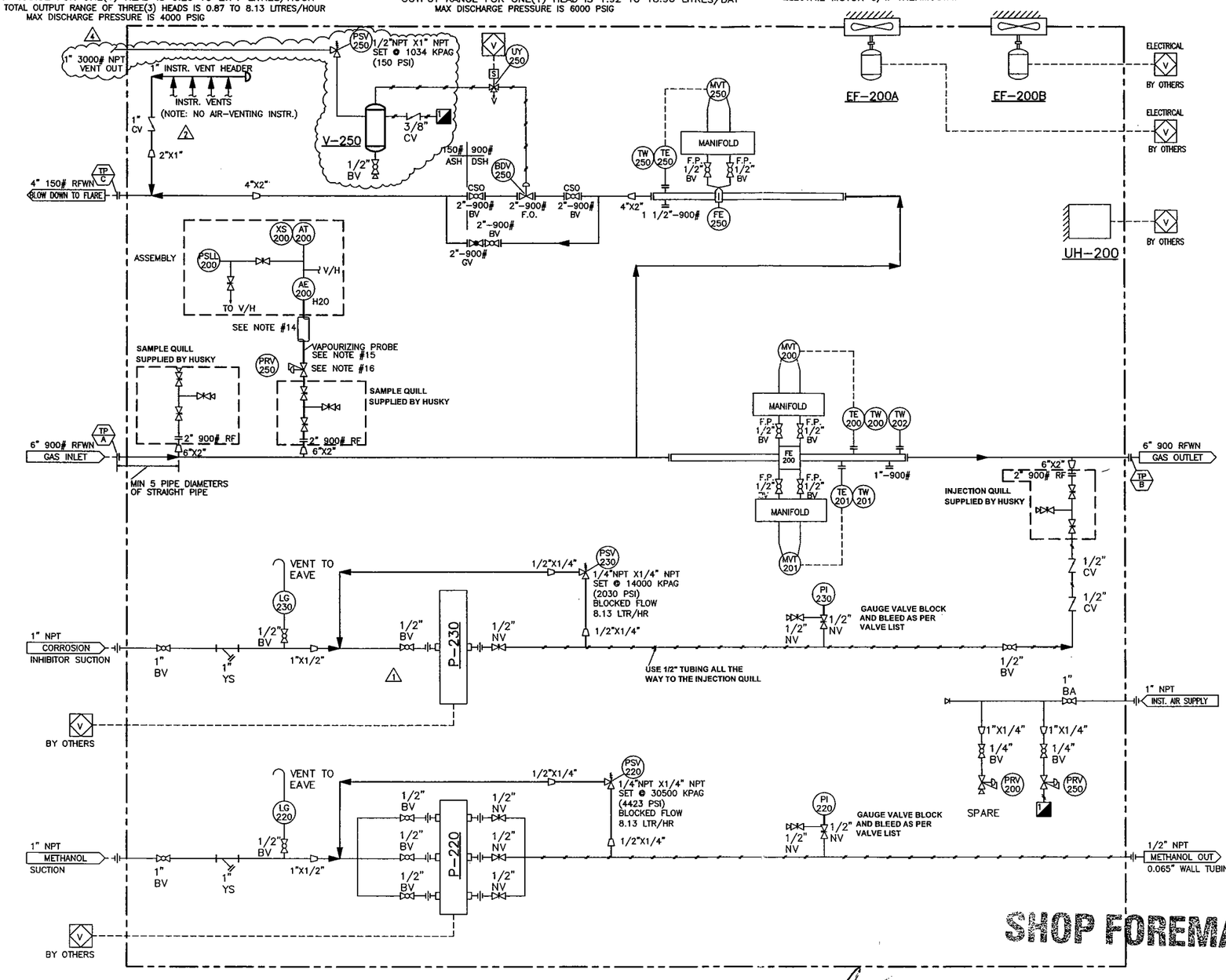

APPROVED FOR CONSTRUCTION
DATE: JUL 23 2009
SIGNED:
REVISED
DESTROY ALL PREVIOUS COPIES

SHOP FOREMAN

NOTES :

1. MINIMUM TUBING WALL THICKNESS 0.065". ALL TUBING TO BE 316 SS, TUBE FITTINGS SWAGELOK 316SS.
2. ELECTRICAL BY OTHERS.
3. SUPPLIED BY OTHERS INSTALLED BY PESC.
   -FE 200/250
   -TE 200/201/250
4. SUPPLIED AND INSTALLED BY OTHERS.
   -MVT 200/201/250
5. 10% IMPACT TESTING ON ALL WELDS.
6. 100% X-RAY.
7. PWHT.
8. P.ENG STAMPED BUILDING & SKID DRAWINGS.
9. BUILDING
   R20 ROOF, R12 WALLS
   TWO(2)-40" X 40" SLIDING WINDOWS C/W SCREEN
   EAVES TROUGH, ICE RAKES, DOWNSPOUTS
   TWO(2)-DOOR CANOPIES
   EXT. WALL & TRIMS PER HUSKY BLDG. SPECIFICATION
   24 GAUGE WHITE LINER
   6 MIL. VAPOUR BARRIER
   TWO(2)-3'-0" X 7'-0" DOORS PANIC, IWG GLASS LOCKS, CHECK CHAIN
   WEATHER STRIPPING THRESHOLDS
   TWO(2)-12" X 12" LOUVERS C/W SLIDERS & SCREEN
   TWO(2)-EXHAUST FANS 6AC PH EX PROOF
10. WELDED PIPING 1 1/2" AND LARGER 1/8" CA.
11. DSH SPEC:
    PIPE SCH 160,SA-333 GR.6;
    WELD FITTINGS: SA-420 WPL6
    ALL FLANGES SA-350-LF2 CL1
    ALL GASKETS 316 SST FLEXIBLE GRAPHITE
    ALL BOLTING SA-193-B7M/SA-194-2HM
12. ASH SPEC:
    PIPE SIZE 1-2" SCH 80,SA-106B,
    PIPE SIZE 3-6" SCH STD,SA-106B.
    WELD FITTINGS:
    ALL FITTINGS SA-234 WPB
    ALL FLANGES SA-105N
    ALL GASKETS 316 SST FLEXIBLE GRAPHITE
    ALL BOLTING SA-193-B7M/SA-194-2HM
13. THREADED PIPE
    ALL THREADED PIPINGS SA-106B SCH 160
    ALL THREADED FITTINGS SA-105N 3000#
    ALL THREADED NIPPLES SA-106B SCH 160
14. SKID
    3/16" CHECKER PLATE FLOOR
    3" SPRAY FOAM FIRE RETARDANT UNDER SKID INSULATION
    CONTAINMENT AROUND PUMPS SEAL WELD TO CHECKER PLATE
15. PAINT
    PAINT PREP SSPC SP6
    2-COATS CLOVERDALE DTM POLYURETHANE ENAMEL (ALIPHATIC URETHANE) WARM GRAY
    APPLICATION AS PER PRODUCT SPEC
16. AE-200 HEAT TRACING AND INSULATION BY OTHERS.
17. AE-200 VAPORIZING PROBE & INSULATION BY OTHERS.
18. AE-200 PRV-200 SUPPLIED BY CUSTOMER, INSTALL BY PESC.

NOTES:

REFERENCE DRAWINGS		REV	DESCRIPTION	BY	DATE	CHK'D	APP'D
		4	ADDED V-250	SW	09/07/23	BX	RWS
		3	REVISED AS NOTED	LL	09/06/18	BX	RWS
		2	REVISED AS NOTED	LL	09/06/04	BX	RWS
		1	REVISED AS NOTED	LL	09/06/03	BX	RWS
18378-SKD-01	STRUCTURAL STEEL - PLAN	0	ISSUED FOR CONSTRUCTION	LL	09/06/01	BX	RWS
18378-GA-02	GENERAL ARRANGEMENT - ELEVATION	B	RE-ISSUED FOR APPROVAL	LL	09/05/26	BX	RWS
18378-GA-01	GENERAL ARRANGEMENT - PLAN	A	ISSUED FOR APPROVAL	LL	09/05/19	SW	RWS

ENGINEER'S STAMP

DRAWN BY	LL	09/05/13
CHK'D BY	BX	09/05/13
APP'D BY	RWS	09/05/13
CADD REF	18378-PID-01.dwg	SCALE NTS

PLATINUM Energy Services Corp. CALGARY, ALBERTA

CLIENT
HUSKY ENERGY
c/o GAS LIQUIDS ENGINEERING LTD.
WOLVERINE DEVELOPMENT PROJECT B-49-C/93-P-2

TITLE
SALES METER SKID PACKAGE
PIPING & INSTRUMENTATION DIAGRAM

JOB NO.	DRAWING NO.	REV
18378	18378-PID-01	4

The information contained in this drawing is the confidential property of Platinum Energy Services Corp. No part thereof shall be reproduced or communicated to a third party without written authorization from Platinum Energy Services Corp.

FABRICATION NORTH

TIE-IN SCHEDULE			
MARK	SIZE / RATING	ELEVATION	DESCRIPTION
A	6" – 900#	45" (1143 mm)	SOUR GAS INLET
B	6" – 900#	45" (1143 mm)	SOUR GAS OUTLET
C	4" – 150#	45" (1143 mm)	BLOW DOWN TO FLARE
D	1" NPT	SHOP FIT	METHANOL PUMP SUCTION
E	1" NPT	SHOP FIT	CORROSION INHIBITOR SUCTION
F	1/2" TUBING	SHOP FIT	METHANOL TO WELL HEADER
G	1" NPT	SHOP FIT	INSTRUMENT AIR INLET
2 H	1" NPT	SHOP FIT	V-250 PSV OUT

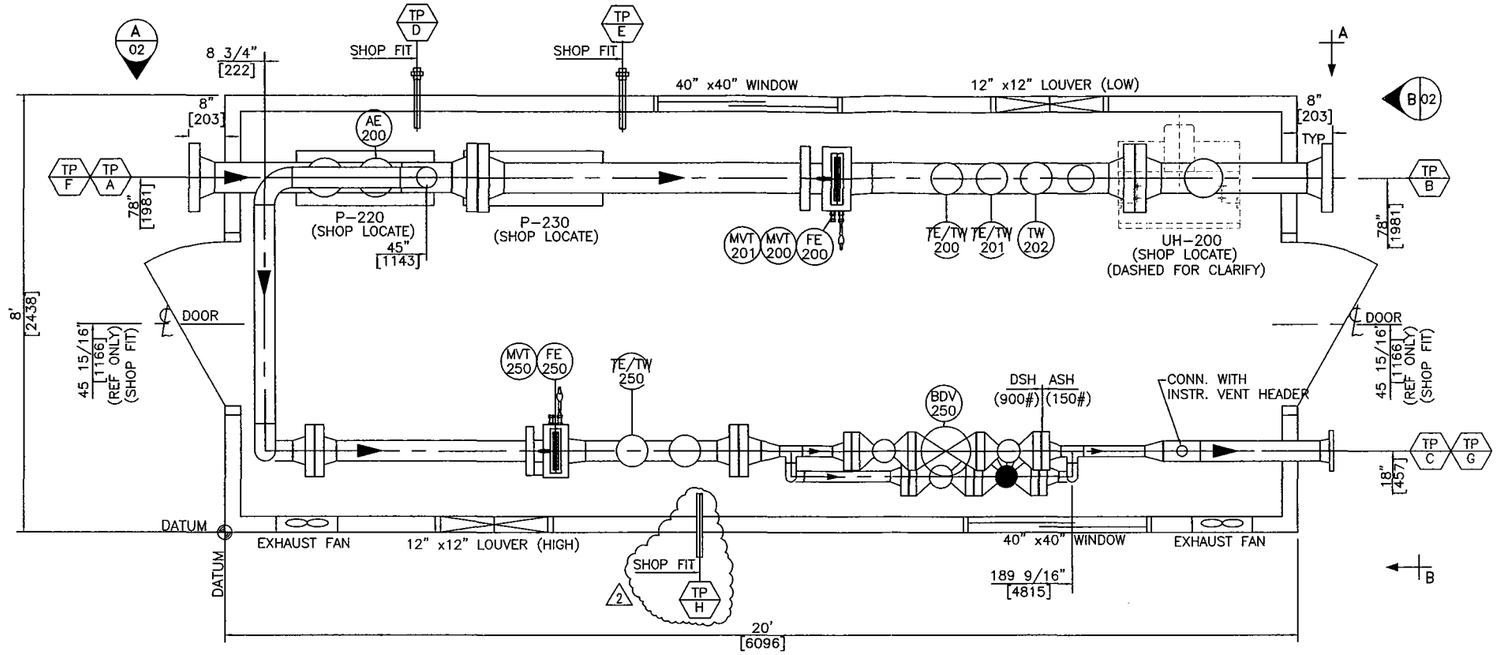

PLAN VIEW

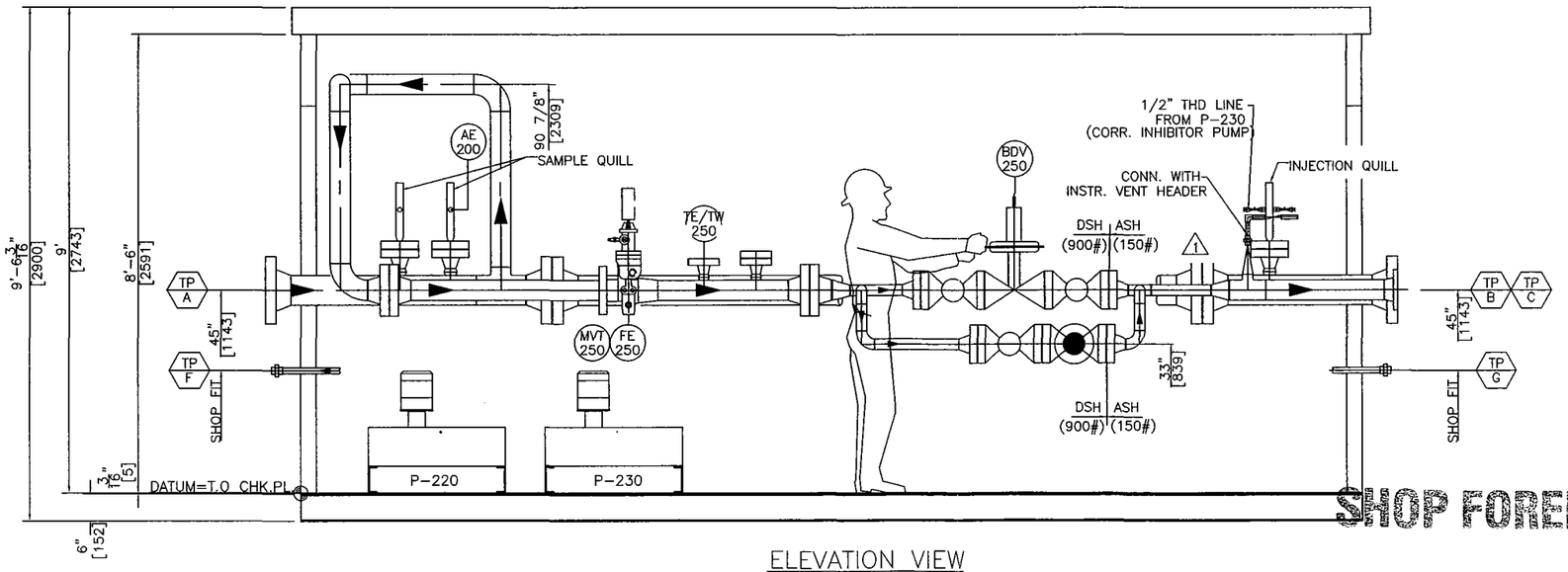

ELEVATION VIEW

APPROVED FOR CONSTRUCTION
DATE: JUL 23 2009
SIGNED:
REVISED
DESTROY ALL PREVIOUS COPIES
SHOP FOREMAN

NOTES:
1.) PIPING CODE TO ANSI B31.3 (CURRENT EDITION).
2.) DIMENSIONS ARE IN MILLIMETRES.
ELEVATION DATUM = T.O. CHK'D PL.
TAIL DIMENSIONS ARE FROM SKID PLAN DATUM.
DIMENSIONS TO CENTERLINES (UNO)
3.) 3" SPRAY FOAM FIRE RETARDANT UNDER SKID INSULATION.
4.) CONTAINMENT AROUND PUMPS, SEAL WELD TO CHECKER PLATE.
4.) SHIPPING DIMENSIONS: 20'(6096mm)x8'-0"(2438mm)x9'-2 3/8"(2803mm)
5.) SHIPPING WEIGHT: TOTAL WEIGHT = 15,000 lbs (6804 kg)
6.) PIPE SUPPORTS SUBJECT TO CHANGE UPON ASSEMBLY
7.) PAINT PREP SSPC-SP6, 2 COATS CLOVERDALE DTM POLYURETHANE ENAMEL (ALIPHATIC URETHANE) WARM GRAY, APPLICATION PER PRODUCT SPEC.

REFERENCE DRAWINGS		REV
18378-GA-02	GENERAL ARRANGEMENT – SECTION VIEWS "A-A"&"B-B"	B
18378-PID-01	PIPING & INSTRUMENTATION DIAGRAME	A

REV	DESCRIPTION	BY	DATE	CHK'D	APP'D
2	ADDED TP-H	SW	09/07/23	BX	RWS
1	DELETE ASH/AUH SPEC BREAK	SW	09/06/04	SW	RWS
0	ISSUED FOR CONSTRUCTION	SW	09/06/01	SW	RWS
B	REVISED AS PER CLIENT'S MARK-UP	SW	09/05/27	SW	RWS
A	ISSUED FOR APPROVAL	SW	09/05/23	SW	RWS

ENGINEER'S STAMP

DRAWN BY	SW	09/05/23
CHK'D BY	SW	09/05/23
APP'D BY	RWS	09/05/23
CAD REF	18378-GA-01.DWG	SCALE 3/4"=1'-0"

PLATINUM Energy Services Corp. CALGARY, ALBERTA

CLIENT
HUSKY ENERGY C/O
GAS LIQUIDS ENGINEERING LTD.
B-49-C/93-P-2/WOLVERINE DEVELOPMENT PROJECT

TITLE
SALES METER SKID PACKAGE
GENERAL ARRANGEMENT–PLAN & ELEVATION VIEWS

JOB NO.	DRAWING NO.	REV
18378	18378-GA-01	2

The information contained in this drawing is the confidential property of Platinum Energy Services Corp. No part thereof shall be reproduced or communicated to a third party without written authorization from Platinum Energy Services Corp.

FABRICATION NORTH

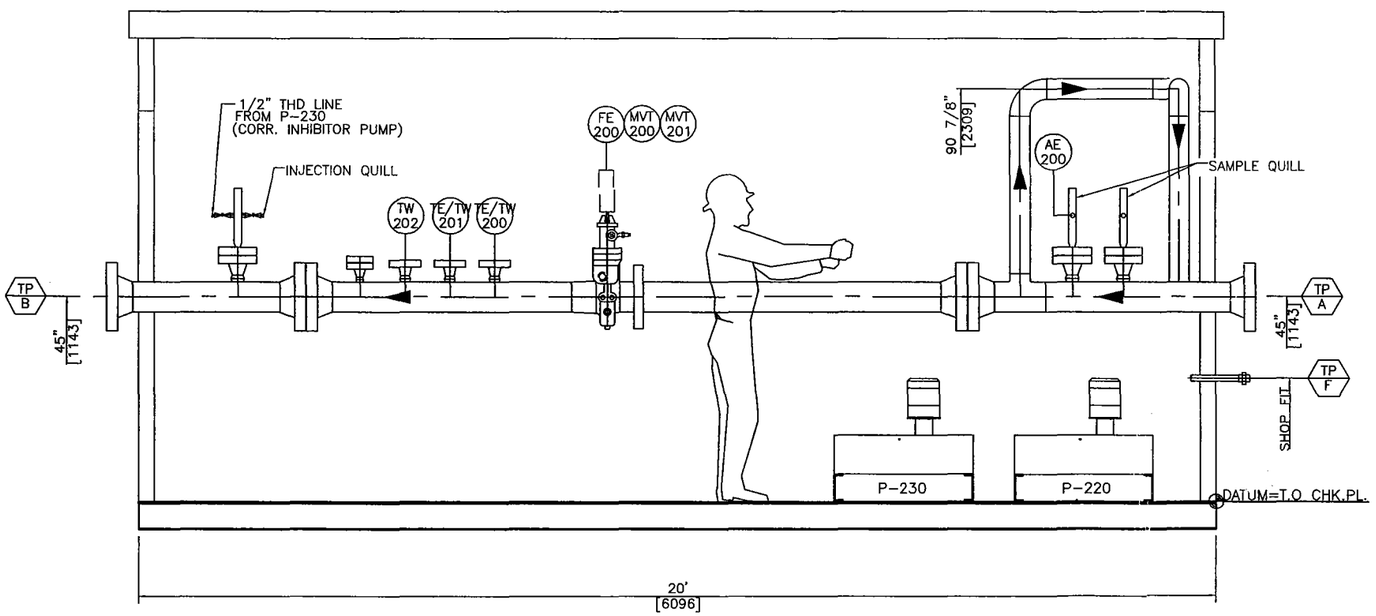

A 01 SECTION

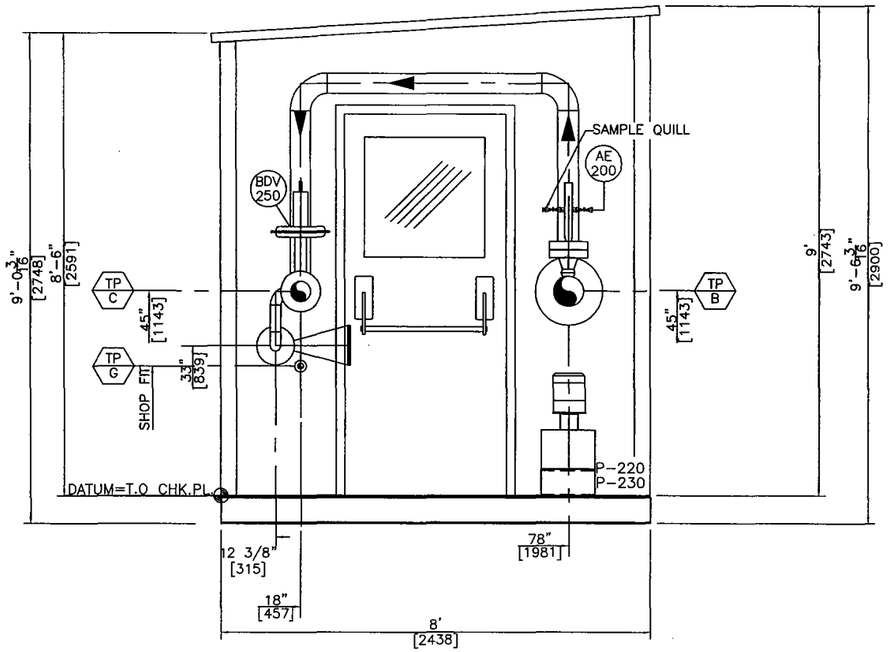

B 01 SECTION

QUALITY CONTROL

APPROVED FOR CONSTRUCTION
DATE: JUN 0 1 2009
SIGNED:

NOTES:

REFERENCE DRAWINGS		REV	DESCRIPTION	BY	DATE	CHK'D	APP'D
		0	ISSUED FOR CONSTRUCTION	SW	09/06/01	SW	RWS
18378-GA-01	GENERAL ARRANGEMENT - PLAN & ELEVATION VIEW	B	REVISED AS PER CLIENT'S MARK-UP	SW	09/05/27	SW	RWS
18378-PID-01	PIPING & INSTRUMENTATION DIAGRAME	A	ISSUED FOR APPROVAL	SW	09/05/19	SW	RWS

ENGINEER'S STAMP

DRAWN BY	SW	09/05/23
CHK'D BY	SW	09/05/23
APP'D BY	RWS	09/05/23
CAD REF	18378-GA-02.DWG	SCALE 3/4"=1'-0"

PLATINUM Energy Services Corp. CALGARY, ALBERTA

CLIENT: HUSKY ENERGY C/O
GAS LIQUIDS ENGINEERING LTD.
B-49-C/93-P-2/WOLVERINE DEVELOPMENT PROJECT

TITLE: SALES METER SKID PACKAGE
GENERAL ARRANGEMENT - SECTION VIEWS

JOB NO.	DRAWING NO.	REV
18378	18378-GA-02	0

The information contained in this drawing is the confidential property of Platinum Energy Services Corp. No part thereof shall be reproduced or communicated to a third party without written authorization from Platinum Energy Services Corp.

FABRICATION NORTH

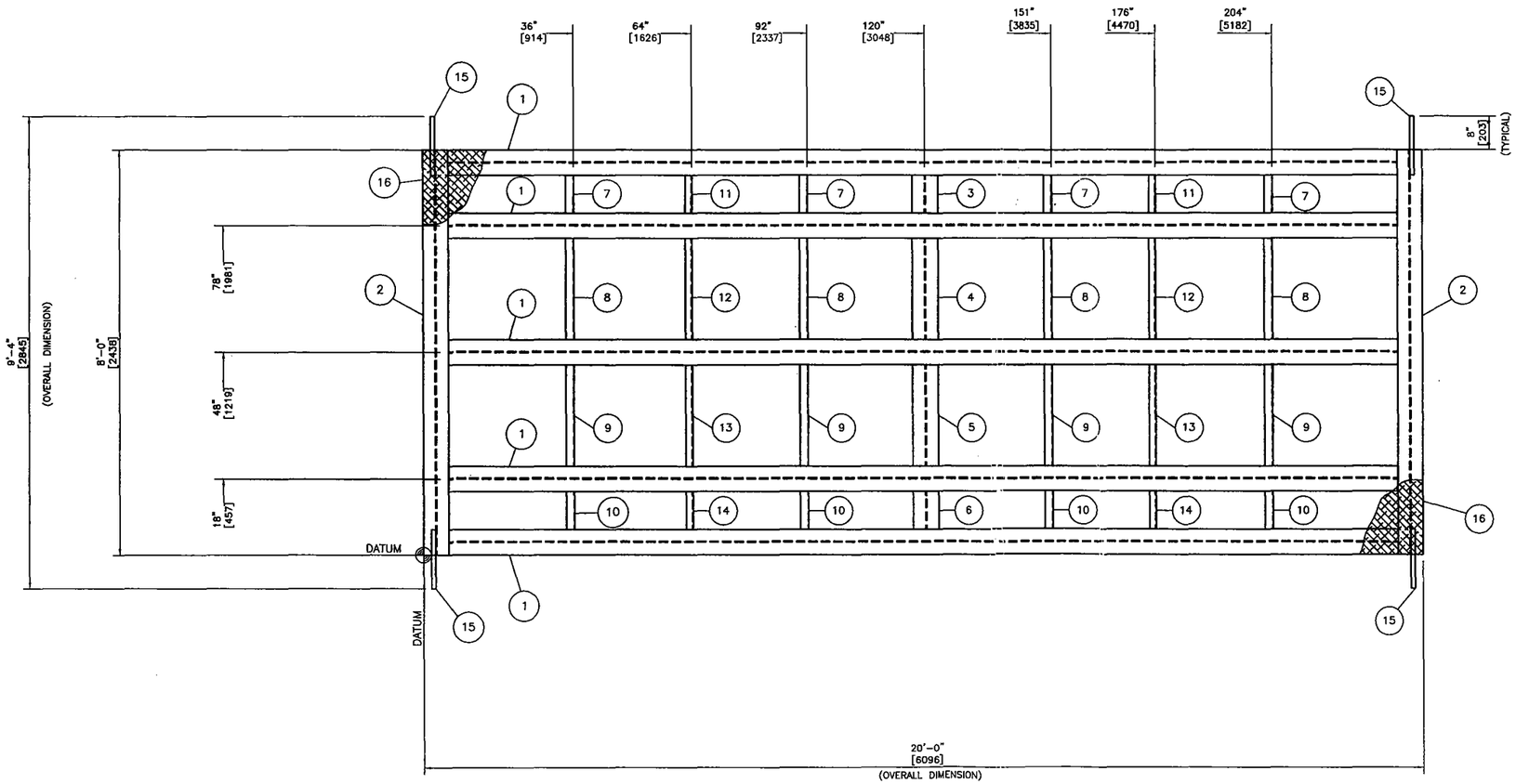

BILL OF MATERIAL			
ITEM	REQ'D	DESCRIPTION	
1	5	W6 x 15 x 19'-5 3/4" LG	G40.21 G350W
2	2	W6 x 15 x 8'-0" LG	G40.21 G350W
3	1	W6 x 15 x 1'-2 3/4" LG	G40.21 G350W
4	1	W6 x 15 x 2'-5 3/4 " LG	G40.21 G350W
5	1	W6 x 15 x 2'-5 3/4 " LG	G40.21 G350W
6	1	W6 x 15 x 1'-2 3/4 " LG	G40.21 G350W
7	4	L2 x 2 x 1/4 x 1'-2 3/4 " LG	G40.21 G300W
8	4	L2 x 2 x 1/4 x 2'-5 3/4" LG	G40.21 G300W
9	4	L2 x 2 x 1/4 x 2'-5 3/4 " LG	G40.21 G300W
10	4	L2 x 2 x 1/4 x 1'-2 3/4 " LG	G40.21 G300W
11	2	C4 x 5.4 x 1'-2 3/4" LG	G40.21 G300W
12	2	C4 x 5.4 x 2'-5 3/4" LG	G40.21 G300W
13	2	C4 x 5.4 x 2'-5 3/4" LG	G40.21 G300W
14	2	C4 x 5.4 x 1'-2 3/4" LG	G40.21 G300W
15	4	LIFT LUGS 3/4" THK PLATE, 5 15/32" x 14" (CUT PER DWG)	G40.21 G350WT
16	1	3/16" THK CHEKER PLATE, 20'-0" x 8'-0"	G40.21 G300W

* ALL BOM ITEMS DO NOT INCLUDE WELD GAP (SHOP CTS)

QUALITY CONTROL

APPROVED FOR CONSTRUCTION
DATE: JUN 0 1 2009
SIGNED:

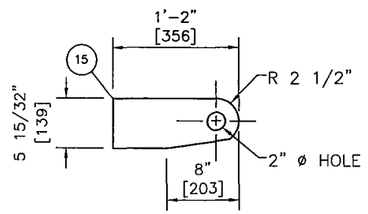

ITEM 15 LIFT LUG DETAIL
(NTS)
REQUIRED 4

NOTES:
1. SKID FRAMING SHALL BE OF SOLID WELDED CONSTRUCTION, 6mm CONTINUOUS FILLET WELDS, COPE ALL FRAMING MEMBERS INTO ONE ANOTHER.
2. ALL WELDS TO BE GROUND FLUSH ON BOTTOM OF SKID.
3. CHECKER PLATE SEAM; CONTINUOUS SEAL WELD ON TOP SIDE, STITCH WELDED TO UNDERSIDE OF SKID, AS REQUIRED.
4. SURFACE PREP: SSPC-SP-6.
   PAINT: TWO (2) COATS OF CLOVERDALE DTM PLYURETHANE ENAMEL (ALIPHATIC URETHANE) WARM GRAY, APPLICATION PER PRODUCT SPEC.
5. 3" SPRAY FOAM FIRE RETARDANT UNDER SKID INSULATION.
6. OVERALL DIMENSIONS: 20'-0"L x 9'-4"W (6096mm x 2845mm)
   WEIGHT: 4 570 lbs (2 073 kg)

REFERENCE DRAWINGS		REV	DESCRIPTION	BY	DATE	CHK'D	APP'D
		0	ISSUED FOR CONSTRUCTION	LL	09/06/01	BX	RWS
		B	RE-ISSUED FOR APPROVAL	DJ	09/05/26	BX	RWS
18378-GA-01	GENERAL ARRANGMENT-PLAN & ELEVATION VIEWS	A	ISSUED FOR APPROVAL	DJ	09/05/19	SW	RWS

ENGINEER'S STAMP

DRAWN BY	DJ	09/05/15
CHK'D BY	BX	09/05/15
APP'D BY	RWS	09/05/15
CAD REF	18378-SKD-01.dwg	
SCALE	3/4"=1'-0"	

PLATINUM Energy Services Corp.
CALGARY, ALBERTA

CLIENT
HUSKY ENERGY
c/o GAS LIQUIDS ENGINEERING LTD.
WOLVERINE DEVELOPMENT PROJECT B-49-C/93-P-2

TITLE
SALES METER SKID PACKAGE
STUCTURAL STEEL PLAN

JOB NO.	DRAWING NO.	REV
18378	18378-SKD-01	0

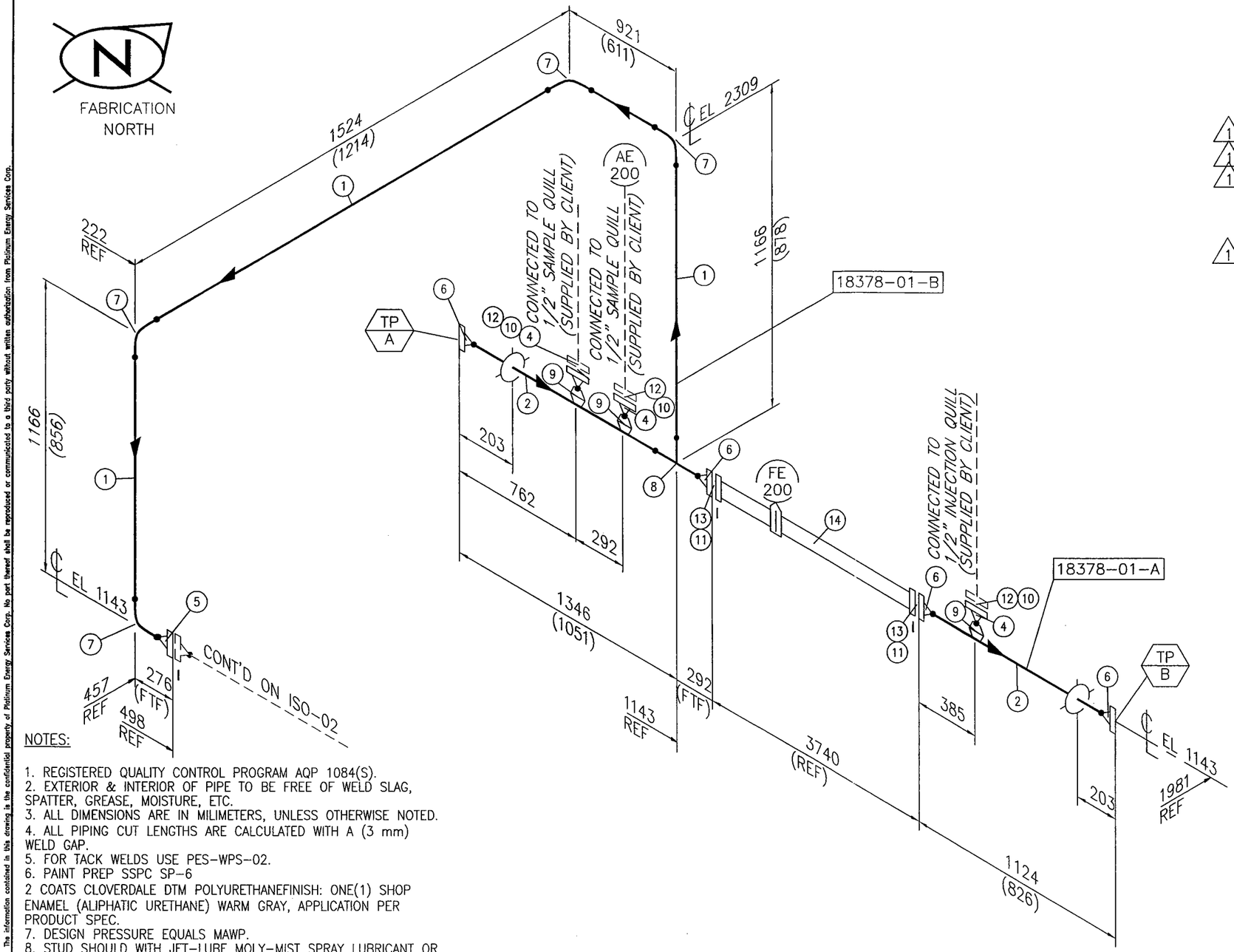

NOTES:

1. REGISTERED QUALITY CONTROL PROGRAM AQP 1084(S).
2. EXTERIOR & INTERIOR OF PIPE TO BE FREE OF WELD SLAG, SPATTER, GREASE, MOISTURE, ETC.
3. ALL DIMENSIONS ARE IN MILIMETERS, UNLESS OTHERWISE NOTED.
4. ALL PIPING CUT LENGTHS ARE CALCULATED WITH A (3 mm) WELD GAP.
5. FOR TACK WELDS USE PES-WPS-02.
6. PAINT PREP SSPC SP-6
2 COATS CLOVERDALE DTM POLYURETHANEFINISH: ONE(1) SHOP ENAMEL (ALIPHATIC URETHANE) WARM GRAY, APPLICATION PER PRODUCT SPEC.
7. DESIGN PRESSURE EQUALS MAWP.
8. STUD SHOULD WITH JET-LUBE MOLY-MIST SPRAY LUBRICANT OR EQUAL.

BILL OF MATERIAL

PIPE

MK	QTY	SIZE	SCHEDULE	DESCRIPTION	MATERIAL	S/F
1	4m	4"	160	PIPE SMLS	SA-333-Gr.6	S
2	2m	6"	160	PIPE SMLS	SA-333-Gr.6	S

FLANGES

MK	QTY	SIZE	RATING	SCHEDULE	DESCRIPTION	MATERIAL	S/F
4	3	2"	900#	160	FLANGE RF WN	SA-350 LF2 CL1	S
5	1	4"	900#	160	FLANGE RF WN	SA-350 LF2 CL1	S
6	4	6"	900#	160	FLANGE RF WN	SA-350 LF2 CL1	S

WELD FITTINGS

MK	QTY	SIZE	SCHEDULE	DESCRIPTION	MATERIAL	S/F
7	4	4"	160	ELBOW 90 DEG LR BW	SA-420-WPL6	S
8	1	6" X 4"	160	REDUCING TEE BW	SA-420-WPL6	S
9	3	2" ON 6"	160	WELDOLET	SA-350 LF2 CL1	S

GASKETS

MK	QTY	SIZE	RATING	DESCRIPTION	MATERIAL	S/F
10	3	2"	900#	RF 1/8" FLEXITALLIC FLEXICARB	316 SS	F
11	2	6"	900#	RF 1/8" FLEXITALLIC FLEXICARB	316 SS	F

BOLTS (SEE NOTE 8)

MK	QTY	SIZE	DESCRIPTION	MATERIAL	S/F
12	3 SETS	7/8" X 5 3/4"	STUD BOLTS CW/2 NUTS-8/SET	SA-193-B7M/SA-194-2HM	F
13	2 SETS	1 1/8" X 7 1/2"	STUD BOLTS CW/2 NUTS-12/SET	SA-193-B7M/SA-194-2HM	F

SUPPORTS & MISC

MK	QTY	SIZE	DESCRIPTION	MATERIAL	S/F
14	1	6"	SENIOR METER RUN (SUPPLIED BY OTHERS)		F

QUALITY CONTROL

APPROVED FOR CONSTRUCTION
DATE: JUN 04 2009
SIGNED:
REVISED
DESTROY ALL PREVIOUS COPIES

LINE NUMBER	GAS INLET	SPEC	DSH	FLUID SERVICE	NORMAL FLUID SERVICE

REFERENCE DRAWINGS		REV.	REVISION DESCRIPTION	DATE	BY	CHK'D	APP'D
--	--	2	REVISED DESIGN DATA	09/06/04	SW	SW	RWS
--	--	1	REVISED ITEMS 4,5,6,9 TO LOW-TEMP. MATERIAL	09/06/03	SW	SW	RWS
--	--	0	ISSUED FOR CONSTRUCTION	09/05/28	SW	SW	RWS

DESIGN DATA			
PIPE CODE	ASME B31.3 (LATEST EDITION & ADDENDA)	WPS	PES-WPS-02/04
DES. PRESS.	14,890 kPa (2,159 PSI)	CA	0.1182" (3mm)
DES. TEMP.	50°C (122°F)	SANDBLAST	SSPC-SP-6
MDMT	-29°C (-20°F)	PRIME	SEE NOTES 6
TEST PRESS.	22,335 kPa (3,238 PSI)	PAINT	SEE NOTES 6
RADIOGRAPHY	100%	INSUL	NO
PWHT	YES	IMPACT TEST 10%	HEAT TRACE NO

PLATINUM Energy Services Corp.

DRAWN BY	SW	09/05/28
CHK'D BY	SW	09/05/28
APP'D BY	RWS	09/05/28

CLIENT: HUSKY ENERGY C/O GAS LIQUIDS ENGINEERING LTD.

PROJECT: B-49-C/93-P-2 WOLVERINE DEVELOPMENT PROJECT

FROM: SKID EDGE (TP-A)

TO: SKID EDGE (TP-B) & ISO-02

JOB NO	DWG. NO.	SHT	REV.
18378	18378-ISO-01	1 OF 1	2

The information contained in this drawing is the confidential property of Platinum Energy Services Corp. No part thereof shall be reproduced or communicated to a third party without written authorization from Platinum Energy Services Corp.

The information contained in this drawing is the confidential property of Platinum Energy Services Corp. No part thereof shall be reproduced or communicated to a third party without written authorization from Platinum Energy Services Corp.

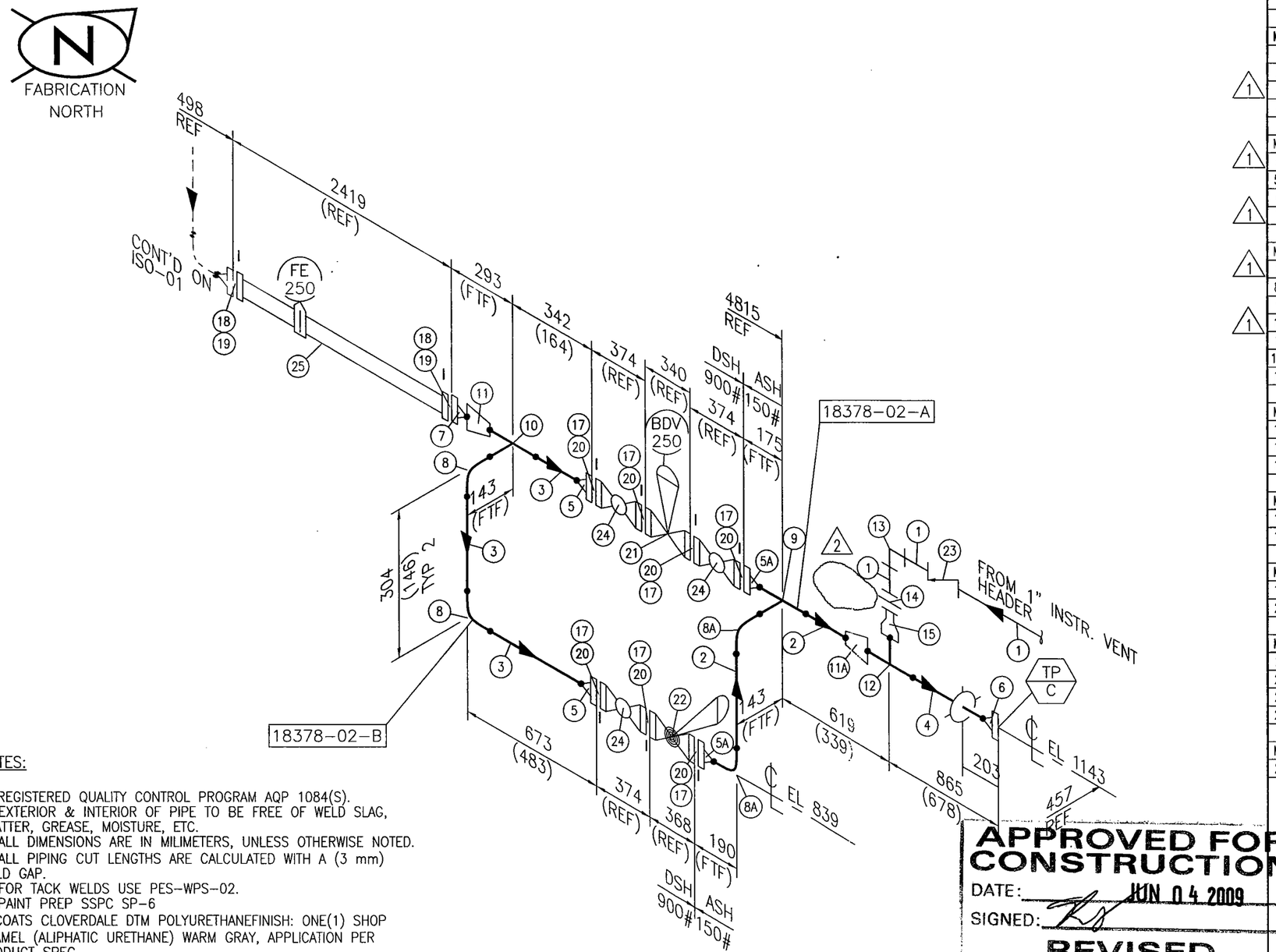

NOTES:

1. REGISTERED QUALITY CONTROL PROGRAM AQP 1084(S).
2. EXTERIOR & INTERIOR OF PIPE TO BE FREE OF WELD SLAG, SPATTER, GREASE, MOISTURE, ETC.
3. ALL DIMENSIONS ARE IN MILIMETERS, UNLESS OTHERWISE NOTED.
4. ALL PIPING CUT LENGTHS ARE CALCULATED WITH A (3 mm) WELD GAP.
5. FOR TACK WELDS USE PES-WPS-02.
6. PAINT PREP SSPC SP-6
2 COATS CLOVERDALE DTM POLYURETHANEFINISH: ONE(1) SHOP ENAMEL (ALIPHATIC URETHANE) WARM GRAY, APPLICATION PER PRODUCT SPEC.
7. DESIGN PRESSURE EQUALS MAWP.
8. STUD SHOULD WITH JET-LUBE MOLY-MIST SPRAY LUBRICANT OR EQUAL.

APPROVED FOR CONSTRUCTION
DATE: JUN 04 2009
SIGNED:
REVISED
DESTROY ALL PREVIOUS COPIES

BILL OF MATERIAL

PIPE

MK	QTY	SIZE	SCHEDULE	DESCRIPTION	MATERIAL	S/F
1	10m	1"	80	PIPE SMLS	SA-106-B	F
2	1m	2"	80	PIPE SMLS	SA-106-B	S
1 3	1m	2"	160	PIPE SMLS	SA-333-6	S
4	1m	4"	STD	PIPE SMLS	SA-106-B	S

FLANGES

MK	QTY	SIZE	RATING	SCHEDULE	DESCRIPTION	MATERIAL	S/F
1 5	2	2"	900#	160	FLANGE RF WN	SA-350 LF2 CL1	S
5A	2	2"	900#	80	FLANGE RF WN	SA-105N	S
1 6	1	4"	150#	STD.	FLANGE RF WN	SA-105N	S
1 7	1	4"	900#	160	FLANGE RF WN	SA-350 LF2 CL1	S

WELD FITTINGS

MK	QTY	SIZE	SCHEDULE	DESCRIPTION	MATERIAL	S/F
1 8	2	2"	160	ELBOW 90 DEG LR BW	SA-420-WPL6	S
8A	2	2"	80	ELBOW 90 DEG LR BW	SA-234-WPB	S
9	1	2" X 2"	80	STRAIGHT TEE BW	SA-234-WPB	S
1 10	1	2" X 2"	160	STRAIGHT TEE BW	SA-420-WPL6	S
11	1	4" X 2"	160	CONC REDUCER BW	SA-420-WPL6	S
11A	1	4" X 2"	STD X 80	CONC REDUCER BW	SA-234-WPB	S
12	1	4" X 2"	STD X 80	REDUCING TEE BW	SA-234-WPB	S

SCREWED & SOCKET WELD FITTINGS

MK	QTY	SIZE	RATING	DESCRIPTION	MATERIAL	S/F
13	1	1"	3000#	ELBOW 90 DEG SCREWED	SA-105	F
14	1	1"	3000#	UNION	SA-105	-
15	1	2" X 1"	80 X 160	CONCENTRIC SWAGE - BLE/TSE	SA-234-WPB	S

GASKETS

MK	QTY	SIZE	RATING	DESCRIPTION	MATERIAL	S/F
17	7	2"	900#	RF 1/8" FLEXITALLIC FLEXICARB	316 SS	F
18	2	4"	900#	RF 1/8" FLEXITALLIC FLEXICARB	316 SS	F

BOLTS (SEE NOTE 8)

MK	QTY	SIZE	DESCRIPTION	MATERIAL	S/F
19	2 SETS	1 1/8" X 6 3/4"	STUD BOLTS CW/2 NUTS-8/SET	SA-193-B7M/SA-194-2HM	F
20	7 SETS	7/8" X 5 3/4"	STUD BOLTS CW/2 NUTS-8/SET	SA-193-B7M/SA-194-2HM	F

VALVES

MK	QTY	SIZE	RATING	DESCRIPTION	MATERIAL	VALVE TAG	S/F
21	1	2"	900#	CONTROL VALVE - FISHER D4			F
22	1	2"	900#	GLOBE VALVE RF (D.S.) 2			F
23	1	1"	900#	CHECK VALVE (WHEATLEY 820)	-	-	-
24	3	2"	900#	BALL VALVE RED PORT RF			F

SUPPORTS & MISC

MK	QTY	SIZE	DESCRIPTION	MATERIAL	S/F
25	1	4"	SENIOR METER RUN (SUPPLIED BY OTHERS)		F

QUALITY CONTROL

2

SPEC	ASH	DSH
DES. PRESS.	1,920 kPa (278 PSI)	14,890 kPa (2,159 PSI)
DES. TEMP.	50°C (122°F)	50°C (122°F)
TEST PRESS.	2,880 kPa (417 PSI)	22,335 kPa (3,238 PSI)
MDMT	-29°C (-20°F)	-29°C (-20°F)

LINE NUMBER	BLOW DOWN TO FLARE	SPEC	DSH/ASH	FLUID SERVICE	NORMAL FLUID SERVICE

REFERENCE DRAWINGS		REV.	REVISION DESCRIPTION	DATE	BY	CHK'D	APP'D
--	--	2	REVISED DESIGN DATA	09/06/04	SW	SW	RWS
--	--	1	REVISED ITEM 3,5,7,8,10 TO LOW-TEMP MATERIAL	09/06/03	SW	SW	RWS
--	--	0	ISSUED FOR CONSTRUCTION	09/05/28	SW	SW	RWS

DESIGN DATA

PIPE CODE	ASME B31.3 (LATEST EDITION & ADDENDA)	WPS	PES-WPS-02/04
DES. PRESS.	SEE CHART	CA	0.1182" (3mm)
DES. TEMP.	SEE CHART	SANDBLAST	SSPC-SP-6
MDMT	SEE CHART	PRIME	SEE NOTES 6
TEST PRESS.	SEE CHART	PAINT	SEE NOTES 6
RADIOGRAPHY	100%	INSUL	NO
PWHT	YES	IMPACT TEST 10%	HEAT TRACE NO

PLATINUM Energy Services Corp.

DRAWN BY	SW	09/05/28
CHK'D BY	SW	09/05/28
APP'D BY	RWS	09/05/28

CLIENT: HUSKY ENERGY C/O GAS LIQUIDS ENGINEERING LTD.

PROJECT: B-49-C/93-P-2 WOLVERINE DEVELOPMENT PROJECT

FROM: ISO-01

TO: SKID EDGE (TP-C)

JOB NO	DWG. NO.	SHT	REV.
18378	18378-ISO-02	1 OF 1	2

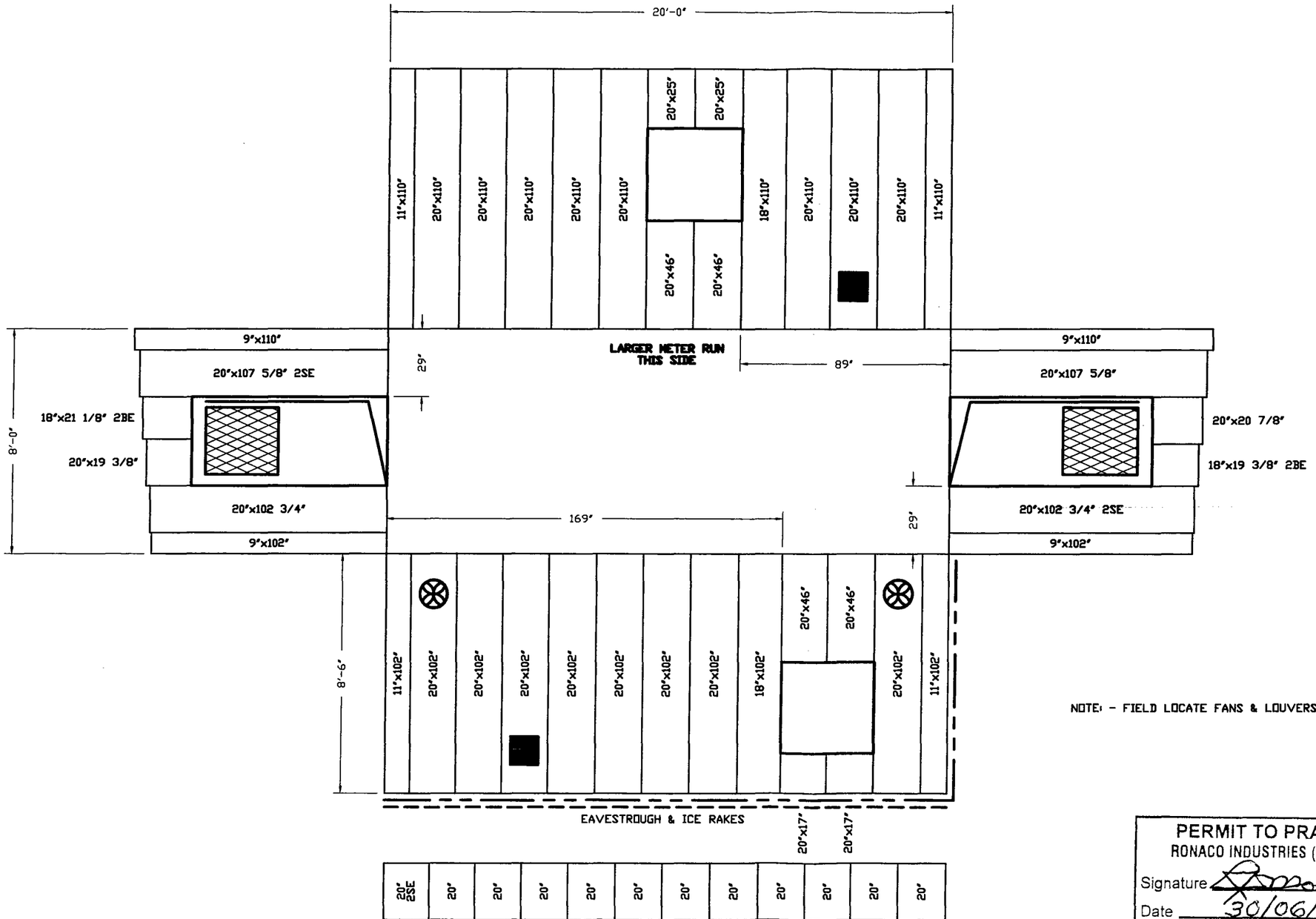

NOTE: - FIELD LOCATE FANS & LOUVERS

PERMIT TO PRACTICE
RONACO INDUSTRIES (1977) LTD.
Signature J.D. Morison
Date 30/06/2009
PERMIT NUMBER: P 5509
The Association of Professional Engineers, Geologists and Geophysicists of Alberta

Specifications

DESIGN SNOW LOAD = 1.1 Kpa
DESIGN WIND LOAD = 0.46 Kpa

BUILDING WEIGHT = Lbs

SHED BUILDING

EXT DIM : 8' x 20' x 8'-6" 1:12 SLOPE
EXT WALL : 22 GA. GALVINIZED GOLD – QC 276
EXT ROOF : 22 GA. GALVINIZED GOLD – QC 276
EXT TRIM : 22 GA. GALVINIZED METRO BROWN – QC 228
INT LINER : 24 ga. ALUM. WHITE
WALL INSU : R-12
ROOF INSU : R-20
VAPOR BARR : 4-MIL VAPOUR BARRIER (MEDIUM)

FANS

12" WALL FAN, X.P., 1/4HP, 120V/60H/1PH, C/W HOOD, Qty = 2

LOUVRES

12" x 12" STAMPED LOUVRE W/SLIDERS, Qty = 2

MAN DOORS

3' x 7' DOOR, L.H., IWG, Qty = 1
3' x 7' DOOR, R.H., IWG, Qty = 1

WINDOWS

40"x40" WINDOW STD GLASS, SLIDING, SCREEN, DOUBLE GLAZED, Qty = 2

Seal

PROFESSIONAL ENGINEER ALBERTA
J.D. MORISON
30/06/2009

METAL BUILDINGS
ronaco
PH:279-2840 CALGARY FAX:279-6180

Customer: PLATINUM ENERGY SERVICES CORP.

Project: BUILDING LAYOUT
JOB No. 18378

Location: CALGARY, ALBERTA

Dwn.by	Date	Job no.	Dwg.no.	Rev.
J.C.R.	6/18/2009	8716	01	A
Cchk'd by	Scale 1/4" = 1'			

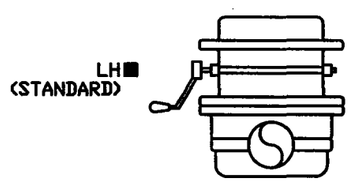

SECTION A-A
SHAFT ORIENTATION

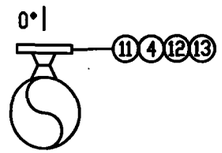

SECTION A-A
COUPLING ORIENTATION

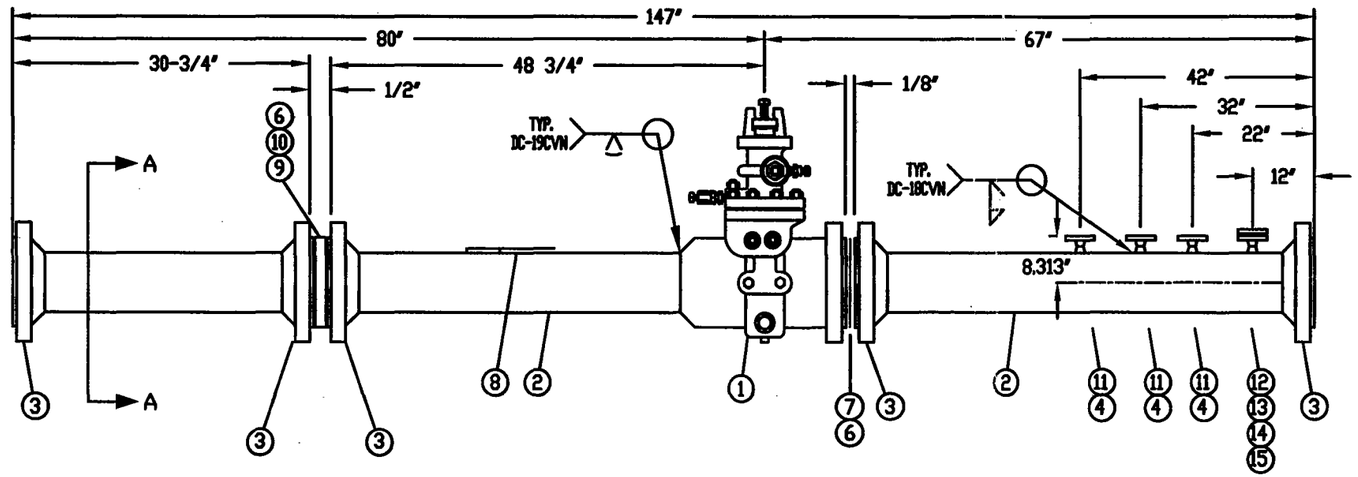

FLOW DIRECTION

BILL OF MATERIAL (ONE RUN ONLY)

ITEM	QTY	DESCRIPTION
1	1	6" s/160 900# RF, MODEL 016C , NACE TRIM
-	-	LCC, SENIOR FITTING
2	3	6" s/160, A333 GR.6 COLD DRAWN SMLS PIPE
3	5	6" s/160 900# RFWN A105N FLANGES
4	3	1 1/2" 900# S/160 RFWN A105N RFWN
6	3	6" 900# 316SS FLEX GASKET
7	1SET	(12) 1-1/8"X7-3/4" B7M STUD W/(24)1-1/8"2HM NUTS
8	1	DANIEL NAMEPLATE W/ METER RUN S.N. & TAGGING
-	-	SA-36 OR EQUAL (CS BRACKET, SS NAMEPLATE)
9	1	6" S/160 CPA 50E FLG, FLOW CONDITIONER, 316SS
10	1SET	CP (12)1-1/8X8-1/4" B7M STUD W/(24)1-1/8"2HM NUT
11	3	6" X 1 1/2" S/160 WOL A105N
12	1	6" X 1" S/160 WOL A105N
13	1	1" 900# S/160 RFWN A105N RFWN w/ BLIND
14	1SET	CP (4) 1X5-3/4" B7M STUD W/(8) 1"2HM NUTS
15	1	1" 900# 316SS FLEX GASKET
		SP-6 SAND BLAST AND 3 MIL EPOXY PRIMER

NDT REQUIREMENTS

RADIOGRAPHY:	100% ALL WELDS, B31.3N ASNTII
HYDROTEST:	4 HOUR @ 3350 PSI, W/CHART
STRESS RELIEF:	YES
HARDNESS TEST:	YES
MAGNETIC PARTICLE:	NO
LIQUID DYE PENETRANT:	NO

INSPECTION	YES	NO
STANDARD 14.3 Verification		X
FULL 14.3 VERIFICATION (RUN & ORIFICE PLATE)	X	
SELECT CHEMISTRY: FOR SA333 GR 6 PIPE	X	
MAX CARBON CONTENT : 0.23%		
CE= C + MN/6 + (Cr + Mo+V)/5 + (Ni+Cu)/15 <= 0.43		

NOTES & TAGGING

1) MANUFACTURED, INSPECTED, TESTED IN ACCORDANCE WITH ASME B31.3
2) DIMENSIONS AS PER CPA RECOMENDATIONS.
3) AGA 3/API 14.3, Part 2, 4th Edition, 2000
4) TAG: FE-200
5) 6" CAT 500 ORIFICE PLATE 316SS BEVEL BORE 2.375"
6) SELECT CHEMISTRY APPLIES FOR SA-333 GR 6 PIPE
-
-

SPECIFICATIONS

QUANTITY:	1		
LINE SIZE:	6"	SCH:	160
RATING:	900# / DMT = -20 DEG F		
MODEL:	016C , WCB		
TYPE:	FLANGNEK SENIOR		
TRIM:	NACE		
AGA FIG:	CPA 50E	BETA:	0.75
CRN:	0F0939.21	0F0634.21	

APPROVED FOR CONSTRUCTION:

REV		
4		
3		
2		
1	-	-
REV	yy/mm/dd	INI

DANIEL INDUSTRIES CANADA

THIS DRAWING IS THE PROPERTY OF DANIEL CANADA, AND MUST NOT BE USED EXCEPT IN CONNECTION WITH OUR WORK. IT SHALL NOT BE REPRODUCED, AND SHALL BE RETURNED TO US ON DEMAND.

HUSKY OIL OPERATIONS C/O GAS LIQUIDS ENG LTD
6" 900# S/160 RFWN SENIOR METER RUN -NACE

P.O.#: 8400030069		DATE: 09-04-27
END USER: HUSKY OIL OPERATIONS LTD	LOCATION: LSD: B-49-C/93-P-2	
DRAWN BY: AD/MP	DWG#: DC-W-09-7027815-2	REV: 01

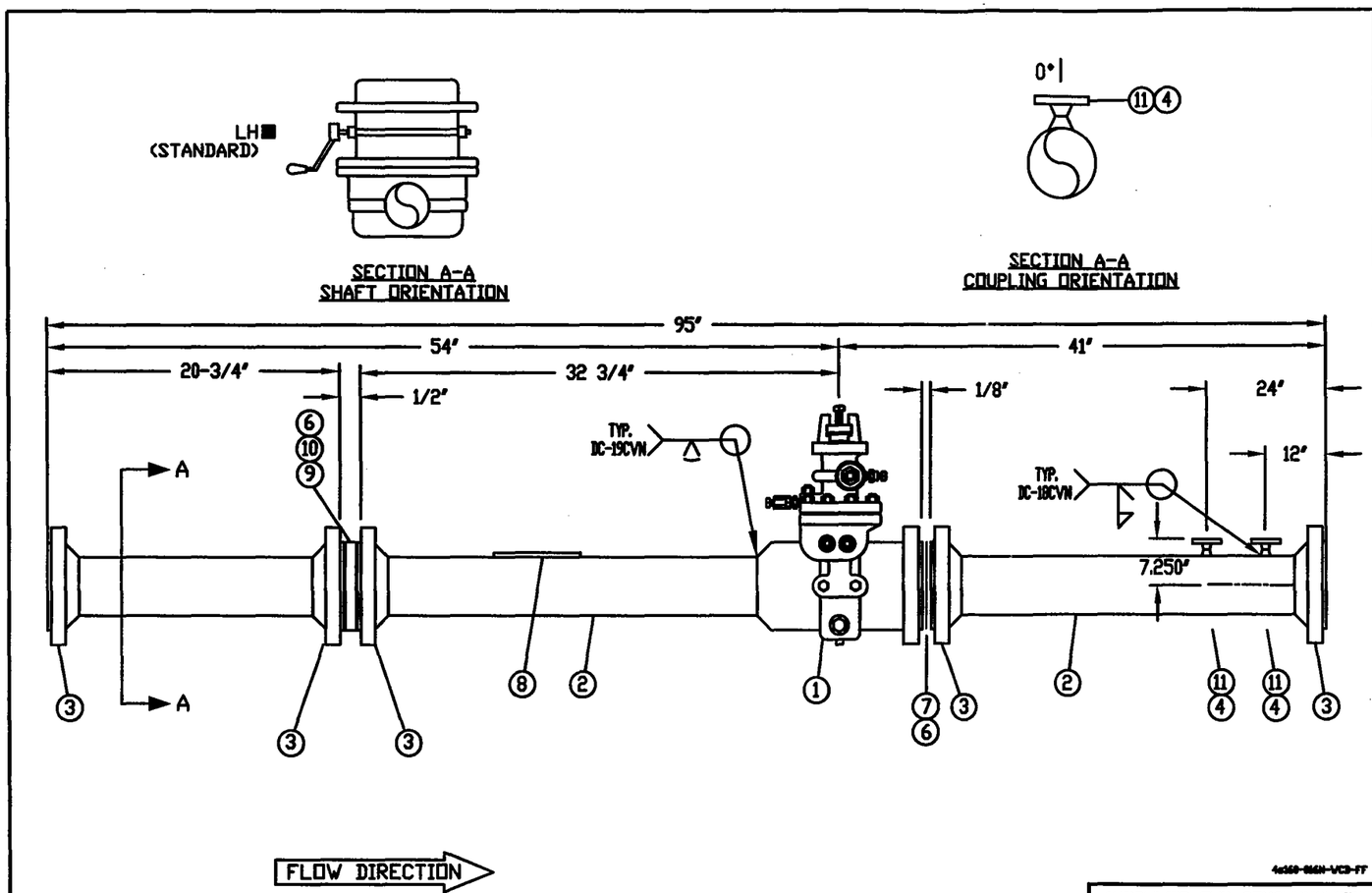

BILL OF MATERIAL (ONE RUN ONLY)

ITEM	QTY	DESCRIPTION
1	1	4" s/160 900# RF, MODEL 016C , NACE TRIM
-	-	LCC, SENIOR FITTING
2	3	4" s/160, A333 GR.6 COLD DRAWN SMLS PIPE
3	5	4" s/160 900# RFWN A105N FLANGES
4	2	1 1/2" 900# S/160 RFWN A105N RFWN
6	3	4" 900# 316SS FLEX GASKET
7	1SET	(8) 1-1/8"X6-3/4" B7M STUD W/(16)1-1/8"2HM NUTS
8	1	DANIEL NAMEPLATE W/ METER RUN S.N. & TAGGING
-	-	SA-36 OR EQUAL (CS BRACKET, SS NAMEPLATE)
9	1	4" S/160 FLANGE TYPE CPA 50E
-	-	FLOW CONDITIONER, 316SS
10	1SET	CP (8)1-1/8X7-1/4" B7M STUD W/(16)1-1/8"2HM NUTS
11	2	4" X 1 1/2" S/160 WOL A105N
-	-	SP-6 SAND BLAST AND 3 MIL EPOXY PRIMER
-	-	-
-	-	-

NDT REQUIREMENTS

RADIOGRAPHY: 100% ALL WELDS, B31.3N ASNTII
HYDROTEST: 1 HOUR @ 3350 PSI, AFFIDAVIT ONLY.
STRESS RELIEF: YES
HARDNESS TEST: YES
MAGNETIC PARTICLE: NO
LIQUID DYE PENETRANT: NO

INSPECTION	YES	NO
STANDARD 14.3 Verification	X	
FULL 14.3 VERIFICATION (RUN & ORIFICE PLATE)		X
SELECT CHEMISTRY: FOR SA-333 GR 6 PIPE	X	
MAX CARBON CONTENT : 0.23%		

CE= C + MN/6 + (Cr + Mo+V)/5 + (Ni+Cu)/15 <= 0.43

NOTES & TAGGING

1) MANUFACTURED, INSPECTED, TESTED IN ACCORDANCE WITH ASME B31.3
2) DIMENSIONS AS PER CPA RECOMENDATIONS.
3) AGA 3/API 14.3, Part 2, 4th Edition, 2000
4) TAG: FE-250
5) 4" CAT 500 ORIFICE PLATE 316SS BEVEL BORE 2.125"
6) SELECT CHEMISTRY APPLIES FOR SA-333 GR 6 PIPE

-

SPECIFICATIONS

QUANTITY: 1
LINE SIZE: 4" SCH: 160
RATING: 900# / DMT = -20 DEG F
MODEL: 016C , WCB
TYPE: FLANGNEK SENIOR
TRIM: NACE
AGA FIG:CPA 50E BETA: 0.75
CRN: 0F0939.21 0F0634.21

APPROVED FOR CONSTRUCTION:

REV	yy/mm/dd	INI
4		
3		
2		
1	-	-

DANIEL INDUSTRIES CANADA

HUSKY OIL OPERATIONS C/O GAS LIQUIDS ENG LTD
4" 900# S/160 RFWN SENIOR METER RUN -NACE

P.O.#: 8400030069 DATE: 09-04-24
END USER: HUSKY OIL OPERATIONS LTD LOCATION: LSD: B-49-C/93-P-2
DRAWN BY: AD/MP DWG#: DC-W-09-7027815-1 REV: 01

REVISION			
REV	DESCRIPTION	APPROVED	DATE
B	SEE SHEET 1	J. McMENAMIN	13DEC04

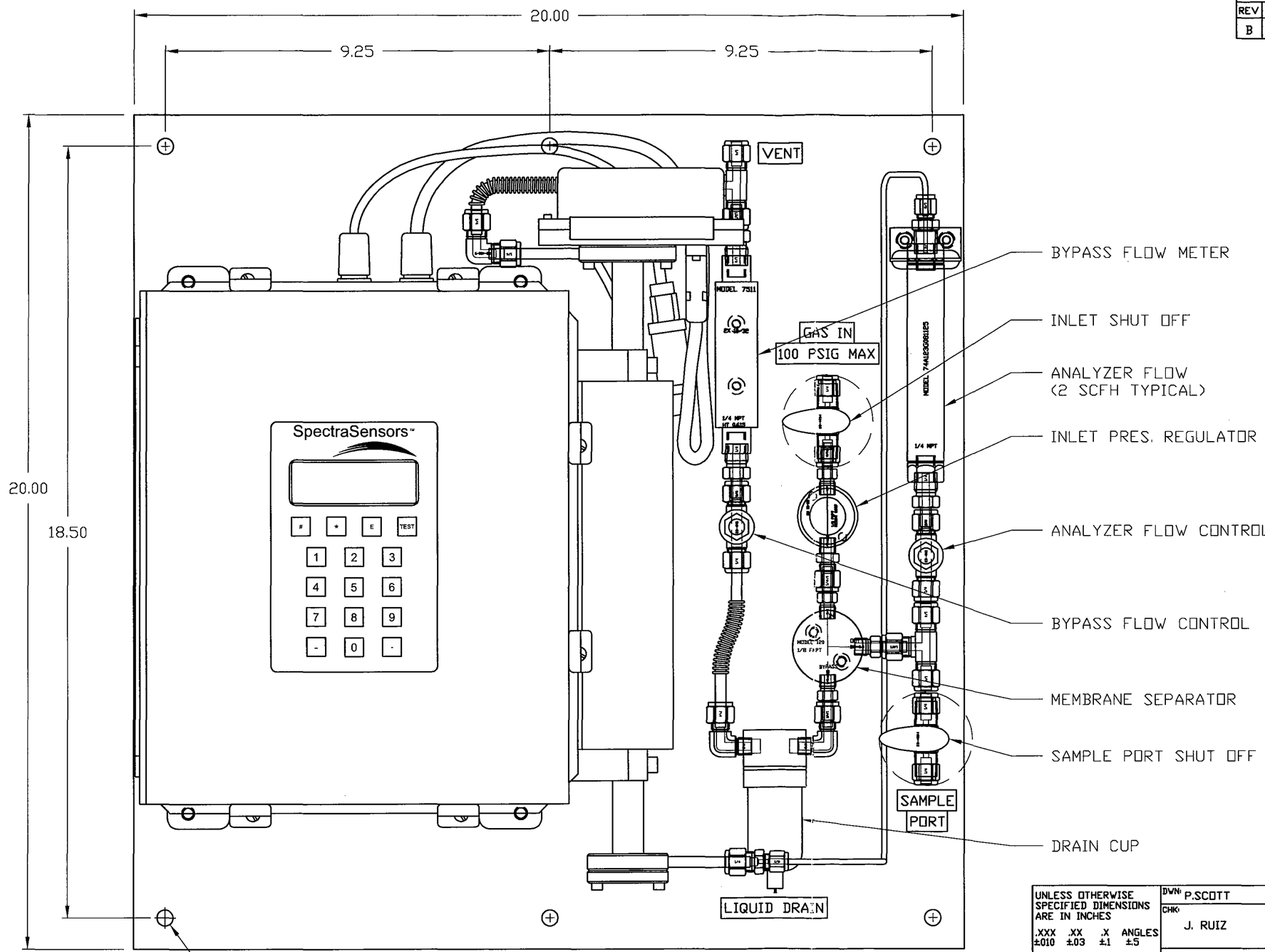

THIS DOCUMENT AND THE INFORMATION DISCLOSED WITHIN ARE PROPRIETARY ITEMS OF SPECTRASENSORS INC., AND MAY NOT BE REPRODUCED IN ANY FORM WITHOUT THE EXPRESSED WRITTEN PERMISSION OF SPECTRASENSORS, INC.

UNLESS OTHERWISE SPECIFIED DIMENSIONS ARE IN INCHES
.XXX ±010 .XX ±.03 .X ±.1 ANGLES ±.5

PROJECTION THIRD ANGLE

DWN: P.SCOTT		13DEC04
CHK: J. RUIZ		13DEC04
APVD: J. McMENAMIN		13DEC04
MATL: SEE SEPARATE B.O.M		

SPECTRASENSORS, INC.
SAN DIMAS, CALIFORNIA, USA

PANEL OUTLINE, 1CH,
10 PSIG, TRAP, PORT, SMPL

SIZE	DWG NO.	REV
B	00402-11111	B

SCALE: NONE SHEET 2 of 3

AUTOCAD FILE: 00402-11111B_1CHx1 FULL.DWG

FORM U-3 MANUFACTURER'S CERTIFICATE OF COMPLIANCE
COVERING PRESSURE VESSELS TO BE STAMPED WITH THE UM SYMBOL . SEE U-1(j)
As Required by the Provisions of the ASME Code Rules, Section VIII, Division 1

1. Manufactured and certified by Campbell Hausfeld/Scott Fetzer Co., 350 Embry Drive, Leitchfield, Kentucky 42754 (Name and address of Manufacturer)

2. Manufactured for Campbell Hausfeld, 350 Embry Drive, Leitchfield, Kentucky 42754 (Name and address of Purchaser)

3. Location of installation Not Known (Name and address)

4. Type: Horizontal (Horiz., vert., or sphere) | Air Receiver (Tank, separator, etc.) | 30 Gallon (Capacity) | D781101-D781110 (Mfg's serial No.)

L9427.5C (CRN) | AR0238 T (Drawing No.) | 2008 (Year built)

5. ASME Code, Section VIII, Div. 1 — 2007 Edition (Edition and Addenda (date)) — None (Code Case No.)

6. Shell (a) No. of course(s): 1 (b) Overall length (ft & in.): 2' 7 1/2"

Course(s)			Material	Thickness		Long Joint (Cat. A)				Circum. Joint (Cat. A, B & C)				Heat Treatment	
No.	Diameter, in.	Length, ft. & in.	Spec./Grade or Type	Nom.	Corr.	Type	Full, Spot, None	Eff.		Type	Full, Spot, None	Eff.		Temp.	Time
				Min.											
1	16" OD	2' 7 1/2"	SA-414-G	.107	0"***	1	None	70%		2	None	65%		N/A	N/A

7. Heads: (a) SA-414-G (Mat'l Spec. No., Grade or Type) H.T.-Time & Temp (b) SA-414-G (Mat'l Spec. No., Grade or Type) H.T. Time & Temp

	Location (Top, Bottom, Ends)	Thickness		Radius		Elliptical	Conical	Hemispherical	Flat	Side to Pressure		Category A		
		Min.	Corr.	Crown	Knuckle	Ratio	Apex Angle	Radius	Diameter	Convex	Concave	Type	Full, Spot, None	Eff.
(a)	Ends	..094	0"***	N/A	N/A	2:1	N/A	N/A	N/A	-----	Concave	--	----	---
(b)	Ends	.094	0"***	N/A	N/A	2:1	N/A	N/A	N/A	-----	Concave	--	----	---

If removable, bolts used (describe other fastening) None (Mat'l Spec. No., Grade, Size, No.)

8. Type of Jacket ----- Jacket Closure ----- (Describe as ogee & weld, bar, etc.)

If bar, give dimensions, if bolted describe or sketch N/A

9. MAWP 200 (internal) N/A (external) psi at max. temp. 450 (internal) N/A (external) °F Min. design metal temp. -20 °F at 200 psi.

10. Impact test Not required per UG-20 (f) (Indicate yes or no and the component(s) impact tested) at test temperature of N/A °F

11. Hydro., pneu., or comb. test press. Hydro 260 Proof test N/A

12. Nozzles, inspection, and safety valve openings:

Purpose (Inlet, Outlet, Drain, etc.)	No.	Diameter or Size	Flange Type	Material		Nozzle Thickness		Reinforcement Material	How Attached		Location (Insp. Open)
				Nozzle	Flange	Nom.	Corr.		Nozzle	Flange	
Inspection	2	1 1/2"	THD'DCPLG	SA-181-70	----	.145	---	Inherent	Welded	-----	End
Inlet/Drain	2	3/8"	THD'DCPLG	SA-181-70	----	.091	---	Inherent	Welded	-----	Shell
Safety	1	1/2"	THD'DCPLG	SA-181-70	-----	.109	---	Inherent	Welded	-----	Shell

13. Supports: Skirt No (Yes or no) Lugs -- (No.) Legs 4 (No.) Others Comp/Motor Base (Describe) Attached **See Remarks (Where and how)

14. Manufacturer's Partial Data Reports properly identified and signed by Commissioned Inspectors have been furnished for the following items of the report: (List the name of part, item number, mfg's. name and identifying number)
None

15. Remarks: **Legs welded to shell bottom; comp/motor base welded to shell top Air Receiver constructed by UG-90 (c) (2) manufacturer
All welds visually inspected only. ***REFER TO UG-25
"Pressure Vessel not intended for all applications" and "User is responsible for proper Safety Valve installation".

CERTIFICATE OF SHOP COMPLIANCE

We certify that the statements made in this report are correct and that all details of design, material, construction, and workmanship of this vessel conform to the ASME Code for Pressure Vessels, Section VIII, Division 1.

UM Certificate of Authorization No. 15181 Expires July 3, 2008

Date 4/14/08 Name Campbell Hausfeld/Scott Fetzer Co. (Manufacturer) Signed (Representative)

Signed (Certified Individual)

RR (9/92)

2009-07-22 08:45 AGI BRANCH 6088 << 4032301040 P 1/1

MS-18378

Taylor Valve Technology, Inc

8300 Southwest 8th Street
Oklahoma City, Oklahoma
telephone: 405.787.0145 facsimile: 405.789.8198
email: info@taylorvalve.com

Serial Number : 47111-15
OG01316.2

Certificate Number: 40011.6298

Customer : **KINGS ENERGY SERVICES**
277, 28042 HWY 11
RED DEER COUNTY, ALBERTA
T4S 2L4

Date : **17-Jul-09**

Sales Order # : 47111
Customer P.O. # : N1235381

Safety Relief Valve Certification

Taylor Valve Technology, Inc. Safety Relief Valves are designed, manufactured and tested in accordance with the provisions of the ASME Boiler and Pressure Vessel Code, Section VIII. This Valve is certified to relieve within plus or minus 2 psi of the set pressure 70 psig or below, and plus or minus 3% of set point for pressures above 70 psig, as allowed for within the provisions of ASME. The published relieving capacities have been certified by the National Board of Boiler and Pressure Vessel Inspectors.

Valve Specifications

Model Number :	Taylor Model 8200 Soft Seat	Orifice :	E
Body Size :	1 Inch	Orifice Diameter :	0.520 Inches
Part Number :	82E4051311	Orifice Area :	0.212 In^2
Body Configuration :	1/2" MNPT X 1" FNPT	Operating Temperature :	70 °F
		Spring Range :	101-225 PSI
		Set Pressure :	150 PSIG

Materials

Body :	WCB Carbon Steel	Spring :	17.7 PH Stainless Steel
Seat Frame :	Carbon Steel	Guide :	304 Stainless Steel
Seat Housing :	17.4 PH H900 Stainless Steel	Adjustment Screw :	Carbon Steel with ENP Plating
Trim :	Standard	Options :	None
Seat :	FKM 90d		

Set Pressure Specifications

	Customer Units		ASME Units
Set Pressure :	150 psig	Set Pressure :	150 psig
ASME High Set Limit :	155 psig	ASME High Set Limit :	155 psig
ASME Low Set Limit :	146 psig	ASME Low Set Limit :	146 psig

ASME (90%) rated capacity at set pressure for indicated fluid, specific gravity and temperature.

Certifying Fluid : Air 553 SCFM Spec Gravity : 1.00 Temp : 60 oF

API 520 (100%) calculated capacity at set pressure for indicated fluid, specific gravity and temperature.

Test Fluid : Air 609 SCFM Spec Gravity : 1.00 Temp : 60 oF

Prepared by : **CALEY ROONEY**

Department : **Customer Service** *Signed* CALEY ROONEY

Approved by : **CALEY ROONEY**

Department : **Quality** *Signed* CALEY ROONEY

MS-18378

EMERSON.
Process Management

Daniel Industries Canada Inc.
P.O. Box 727, Stn T (T2H 2H2)
4215 – 72 Avenue S.E.
Calgary, Alberta T2C 2G5
Canada

T 403-279-1879
F 403-236-1337
www.daniel.com

Meter Tube Nameplate Facsimile

For use with AGA Report 3/API 14.3, Part 2, Third and Fourth Editions

DANIEL ____ a division of Emerson Process Management — Made in Canada

DATE:	6/11/09	AGA FIG:	CPA50E 2000	UL:	53.965
TAG:	FE-250	MAX BETA:	.75	DL:	40.952
S/N:	DCM09-01213	MAX ORIFICE:	2.578	Dr:	3.437
CRN:	OFO634.21	MIN ORIFICE:	.516	ANSI/DMT:	900-20 F

Daniel Industries Canada Ph: 403-279-1879 Fax: 403-236-1337

Daniel Canada WO: 7027815-1 Orifice Fitting S/N: 09230002

Rev 1, 2004-11-29

DANIEL®

EMERSON
Process Management

Orifice Meter Inspection Certificate

AGA3/API 14.3, Part 2, 2000 Edition

DANIEL®
Daniel Industries Canada Inc.

Customer Information

Customer:	HUSKY ENERGY
Customer P.O.:	8400030069
Customer Job No.:	7027815-1
Location/LSD:	N/A
Meter Tag No.:	FE-250
Meter Name:	N/A

General Meter Tube Information

Inspection Number:	
Meter Tube Serial No.:	DCM09-01213
Manufacturer:	Daniel Canada
Inspection Criteria:	AGA3/API 14.3, Part 2, 2000 Edition
AGA3 Configuration:	CPA 50E
Nominal Line Size:	4"
Pipe Schedule:	160
Published I.D. (in.):	3.438"

Measured Internal Diameter of Meter Tube

Position	I.D. Measurements 1" Upstream from the Upstream Face of Orifice Plate (in.)
1	3.437
2	3.437
3	3.437
4	3.437

Calculations	
Coefficient of Thermal Expansion, α_2:	0.00000620
Meter Tube Temperature, T_m (°F):	73.3
Reference Temperature, T_r (°F):	68.0
Measured Meter Tube I.D., D_m (in.):	3.437
Calculated Meter Tube I.D., D_r (in.):	3.437

Verification of the Internal Diameter of the Meter Tube

Note: Internal diameter measurements are checked in a minimum of 4 equally spaced planes at various locations along the length of the meter tube. Max./Min. values for various sections of the meter tube are recorded below. Locations of these check measurements include the orifice fitting, welds, adjoining flanges and pipe.

	Within 1D $_m$ Upstream of Orifice Plate	Downstream	Entire Upstream Secton	
Tolerance (in.):	0.009	0.017	Max. Tolerance (%):	0.500
Allowable Max. (in.):	3.446	3.454	Recorded Max. (in.):	3.439
Allowable Min. (in.):	3.428	3.420	Recorded Min. (in.):	3.432
Recorded Max. (in.):	3.437	3.439	Actual Tolerance (%):	0.204
Recorded Min. (in.):	3.437	3.431	Results:	Pass
Results:	Pass	Pass		

Orifice Plate and Sealing Unit

	Max.	Min.				U/S	D/S
Beta Ratio:	0.75	0.15	Orifice Plate Thickness:	0.125"			
Bore Size (in.):	2.578	0.516	Orifice Plate Eccentricity:		Plate Seal Protrusion:		
			Orifice Plate Bypass:		Plate Seal Gap:		

Internal Surface Roughness

Within 17D U/S of Plate:	Pass
Beyond 17D U/S of Plate:	Pass
Downstream of Plate:	Pass

Meter Tube Configuration and Dimensions

Flow Conditioner or Vane: CPA 50E

1st. Downstream Connection: 1-1/2" Flange

Note: All dimensions are shown in inches unless specified otherwise.

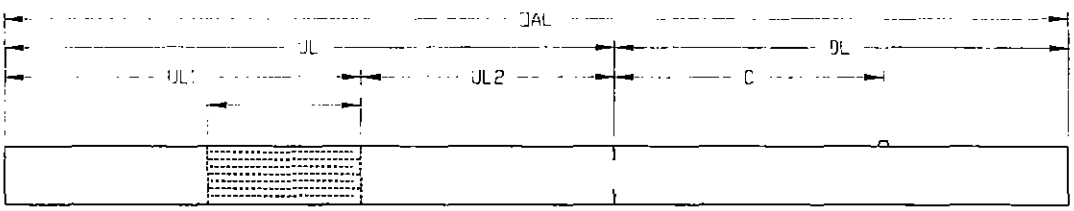

OAL:	94.917
UL:	53.965
UL1:	21.471
UL2:	32.494
L:	0.519
DL:	40.952
C:	16.976

Orifice Fitting Information

Manufacturer:	Daniel	Quantity:	2 Sets
Model No.:	016C	Diameter:	
Serial No.:	09230002	Location:	
ANSI Class:	900#	Size:	1/2"

Flange Tap Information

Flange Taps Relative to Center of Meter Tube: Horizontal

No. of DP Sensors: None

	Location	Tee'd
Static Pressure Sensor:	None	No

Comments and Notes (indicate if attachments are included)

Inspection Kit Number: 2 NOA Number: G-0196 r1

Inspector	Jamie van der Laan	Witness	
Signed		Signed	
Date	June 11, 2009	Date	

P.O. Box 727, Stn. T, (T2H 2H2)
4215-72 Ave. S.E., Calgary, AB T2C 2G5

Ph.: (403) 279-1879
Fax: (403) 236-1337

WESTERN INSPECTION LTD.
3231 - 58th AVENUE, S.E., CALGARY
ALBERTA T2C 0B4
TEL: (403) 279-4540
FAX: (403) 236-3043

RADIOGRAPHIC EXAMINATION REPORT #CGY-336301

Daniel Industries Canada
4215 - 72 Avenue S.E.
Calgary, AB T2C 265
Tel: (403) 539-4247 Fax: (403) 236-1337

Job Number: 27815-1
PO Number: 4324

Date of Exam: Tuesday, Jun 9 2009
Job Location: Western's Shop
Technicians: Corey Crane CEDO, SNT LV. I

Acc Codes: ANSI/ASME B31.3 Normal
Inspected: Pre Heat Treat
Material: Carbon Steel
Isotope: IR 192
Focal Spot: 2x3 mm
Curies: 35
Degree: 100%
Processing: Automatic
Units: in

Legend:

* (Loading)	S = Single
	D = Double
	T = Triple
# (Result)	ACC = Accept
	REJ = Reject
	RETEST = Retest
@ (Degree)	1 = Acceptable
	2 = Slight
	3 = Reject

Note: SFD Does not include reinforcement

Comp#	Test#	Tech	IQI	Wldr	Dia	Thk	Len	Sch	SFD	*	Films	Type	#	@ Discontinuity	From - To
1	X1	RT2-T	#17	X	1.5	0.281		160	15.0	S	3	D5-GEV-I	ACC		
2	X2	RT2-T	#17	X	1.5	0.281		160	15.0	S	3	D5-GEV-I	ACC		

RT 2: T.291 g) S.O.D., nominal pipe diameter times 7. T.291 h) S.S.O.F.D., nominal pipe diameter plus reinforcement.

Units:

Qty	Code
2	NDE/TAN/00

Sign Here: _____
Keith Muise CGSB Lev. II, SNT Lev. II

Sign Here: _____
Customer Representative:

IMPORTANT: Please Sign And Return the Yellow Copy to Western Inspection Ltd. A.S.A.P.

6/10/2009 12:52:05 AM

WESTERN INSPECTION LTD.
3231 - 58th AVENUE, S.E., CALGARY
ALBERTA T2C 0B4
TEL: (403) 279-4540
FAX: (403) 236-3043

RADIOGRAPHIC EXAMINATION REPORT #CGY-336342

Daniel Industries Canada
4215 - 72 Avenue S.E.
Calgary, AB T2C 2G5
Tel: (403) 539-4247 Fax: (403) 236-1337

Job Number: 27815-1
PO Number: 4326

Date of Exam: Wednesday, Jun 10 2009
Job Location: Western's Shop
Technicians: Robert Bodman SNT Lev. II

Acc Codes: ANSI/ASME B31.3 Normal
Inspected: Pre Heat Treat
Material: Carbon Steel
Isotope: IR 192
Focal Spot: 2x3 mm
Curies: 45
Degree: 100%
Processing: Automatic
Units: in

Legend:
---
* (Loading) S = Single, D = Double, T = Triple
\# (Result) ACC = Accept, REJ = Reject, RETEST = Retest
@ (Degree) 1 = Acceptable, 2 = Slight, 3 = Reject

Note: SFD Does not include reinforcement

Comp#	Test#	Tech	IQI	Wldr	Dia	Thk	Len	Sch	SFD	*	Films	Type	#	@ Discontinuity	From - To
					Test Information								Result Information		
1	X3	RT1	1B	X	4	0.531		160	4.5	S	4	D4-GEV- I	ACC		
2	X4	RT1	1B	X	4	0.531		160	4.5	S	4	D4-GEV- I	ACC		
3	X5	RT1	1B	X	4	0.531		160	4.5	S	4	D4-GEV- I	ACC		
4	X6	RT1	1B	X	4	0.531		160	4.5	S	4	D4-GEV- I	ACC		
5	X7	RT1	1B	X	4	0.531		160	4.5	S	4	D4-GEV- I	ACC		
6	X8	RT1	1B	X	4	0.531		160	4.5	S	4	D4-GEV- I	ACC		

RT 1: T.291 g) S.O.D., Nominal Wall Thickness Plus Inside Diameter of Pipe T.291 h) S.S.O.F.D., Wall Thickness Plus Allowable Weld Reinforcement (Both Sides).

Units: Qty	Code
6	4/160/00

Sign Here: _____
Donald Mitchell CGSB Lev. II, SNT Lev. II

Sign Here: _____
Customer Representative:

IMPORTANT: Please Sign And Return the Yellow Copy to Western Inspection Ltd. A.S.A.P.

6/10/2009 2:17:34 PM

DANIEL

Daniel Measurement and Cont
Daniel Industries Canada Inc.
4215 - 72 Avenue S.E.
P.O. Box 727, Station "T"
Calgary, Alberta Canada T2H 2H
Telephone: (403)279-1879
Facsimile: (430)236-1337

HEAT TREATMENT REQUIREMENTS

DATE June 10/09

WORK ORDER 27815-1

P.O. # 4327 CUSTOMER: Husky oil

DRAWING # 7027815-1 REV.# 01

DIAMETER: 4" LENGTH 20 3/4 32 3/4 41 WEIGHT 800 lb PIECES 3

PIPE THICKNESS 531 MATERIAL A333 / A105N

TYPE OF HEAT TREATMENT stress

INSTRUCTIONS:

1. Temperature to be raised from 800° F to 1100-1200° F at a maximum rate of 400° F per hour. Note: Must not exceed 400° F per hour.
2. Temperature to be held at 1100-1200° for 60 minutes.
3. Temperature to be lowered from 1100-1200° F to 800° F at a rate of per hour. NOTE: Must not exceed a drop of 500° F per hour.
4. Additional Requirements:

SIGNATURE:

2-09-093 — FURNACE HEAT #

OPERATORS SIGNATURE

June 10, 2009 — DATE

AADCONTROLS LTD.

518 - 10 AVENUE N. E.
CALGARY ALBERTA T2E 0X6 TEL.(403) 277- 5392

CERTIFICATE OF CALIBRATION

DATE: JUNE 10 2009 DUE DATE: SEPT. 10 2009
COMPANY NAME: INTEGRATED METAL. LOCATION OF WORK: CALGARY
LOOP NAME: FURNACE #2 TYPE OF INSTRUMENT: RECORDER
MANUFACTURER OF INSTRUMENT: HONEYWELL
MODEL NO.: 15303836-12-07-1-000-002-11-009-202-060
SERIAL NO.: CR057680001
INSTRUMENT RANGE: 0-1200°C INPUT TYPE: K
SERVICE REPORT NO.: —
CALIBRATION DEVICE USED: FLUKE: MODEL 725, SER. 7624251
TRACEABLE TO NATIONAL STANDARDS: NIST, NRC

NOTES:

SIGNED FOR AADCONTROLS LTD.:
SIGNED FOR CUSTOMER:

INPUT VALUE	AS FOUND	ERROR	AS LEFT	ERROR AFTER CALIBRATION
50°C	50°C	0	50°C	0
300°C	300°C	0	300°C	0
600°C	600°C	0	600°C	0
900°C	900°C	0	900°C	0
1150°C	1150°C	0	1150°C	0

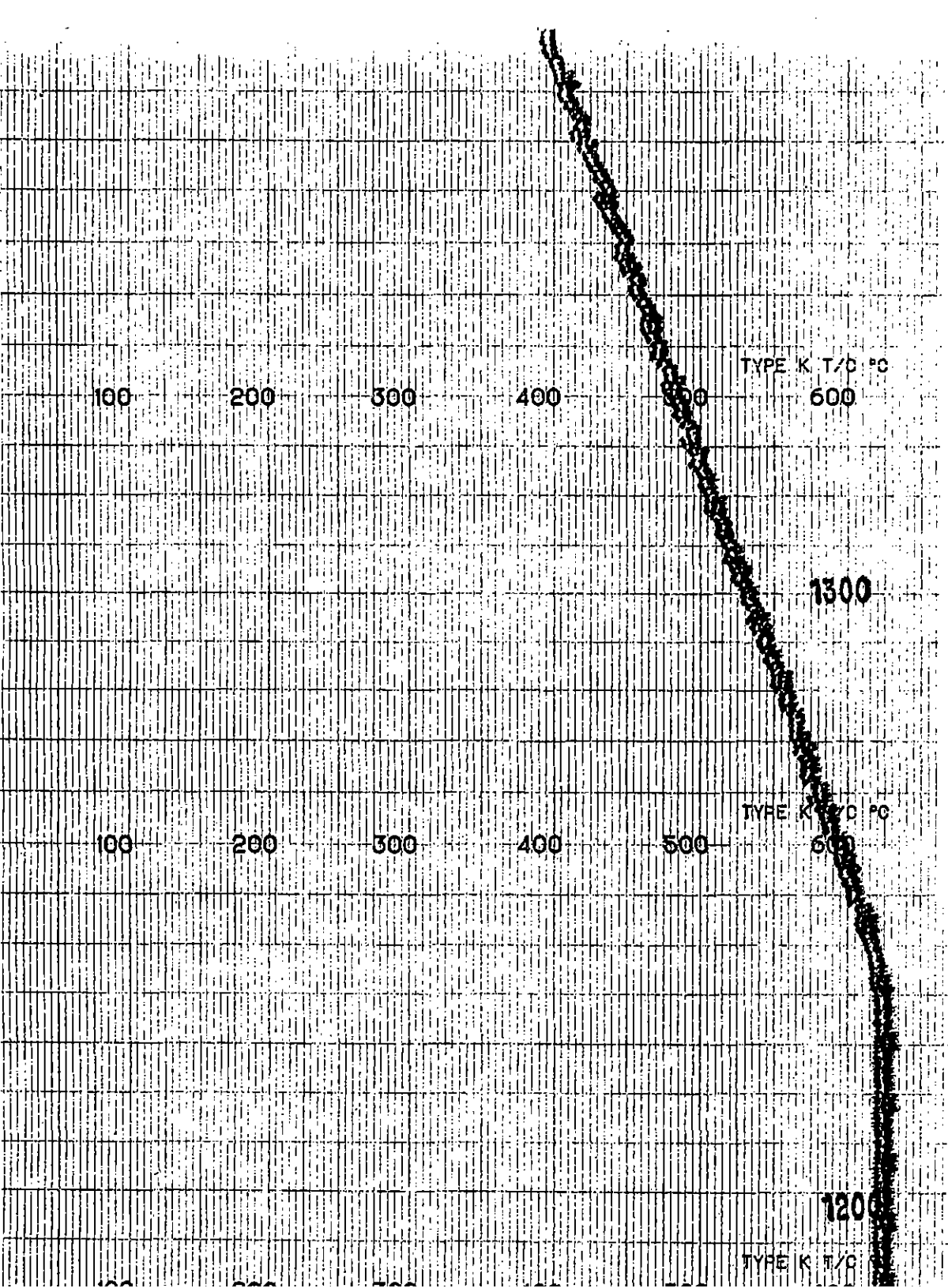

INTEGRATED METALLURGICAL SERVICES LTD.
5110A - 77 Avenue S.E., Calgary, Alberta T2C 2Z2

DATE:	JUNE 10, 2009
CUSTOMER:	DANIEL INDUSTRIES CANADA
ORDER NO:	4327
JOB NO:	27815-1
PROCEDURE:	P.W.H.T.
HEAT TREATING PER:	A.S.M.E.
RATE OF RISE:	MOD. To 425° C to 621° C at 150° C/Hr.
HOLDING TEMP.:	621 ±14° C
HOLDING TIME:	60 Min. Minimum
COOLING RATE:	621° C to 425° C at 150° C
MATERIAL:	SA-333-GR.6/SA-105N

NOTES:

3 PCS. 4"SCH.160 SENIOR METER RUN x .531"wall

20-¾"LG. & 32-¾"LG. & 41"LG. 800# TOTAL

JOB #27815 DWG. #7027815 REV.1 – HUSKY OIL

OPERATOR: Collin Pryde HEAT: #2-09-093

SIGNING FOR I.M.S. LTD.:

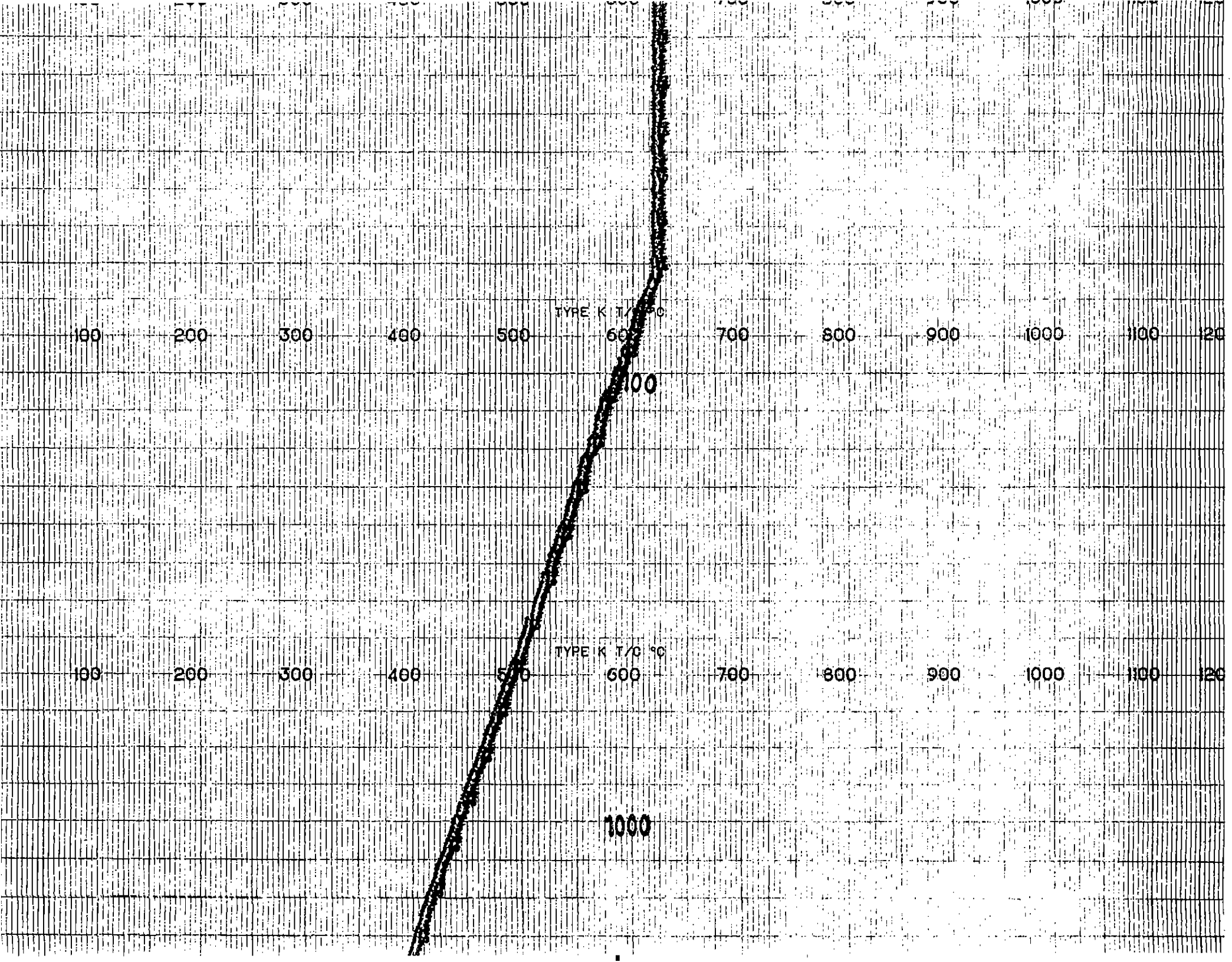
TYPE K T/C °C
100
200
300
400
500
600
700
800
900
1000
1100
120
100
TYPE K T/C °C
100
200
300
400
500
600
700
800
900
1000
1100
120
1000

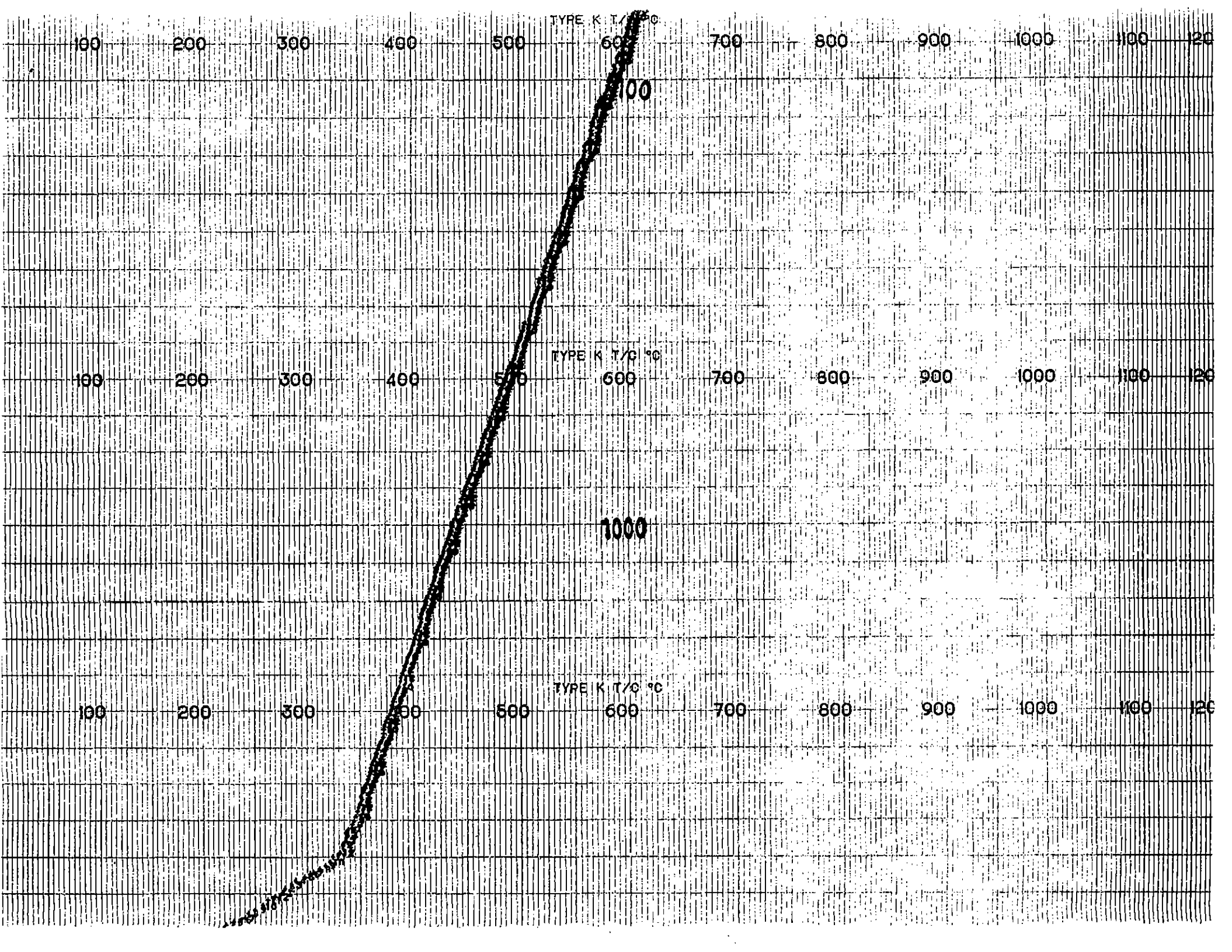
TYPE K T/C °C
100
200
300
400
500
600
700
800
900
1000
1100
100
TYPE K T/C °C
1000
TYPE K T/C °C

EMERSON.
Process Management

Daniel Industries Canada Inc.
P.O. Box 727, Stn T (T2H 2H2)
4215 – 72 Avenue S.E.
Calgary, Alberta T2C 2G5
Canada
T 403-279-1879
F 403-236-1337

Date: June 15/09

Affidavit of Hydrostatic Test

Customer: Husky Oil

Daniel Work Order # 27815-1

Daniel Industries Canada hereby certifies that these goods were hydrostatically tested and meet the Leak Test requirements of:
ASME B31.3 (✓) ASME B31.1 ( )

Senior (✓) Simplex ( ) OFU ( ) Spools ( ) Air Test ( ) Chart ( )

Size /ANSI: 4" 900#

Pressure: 3350 PSIG (✓) KPAG ( )

Hour(s): 1(✓), 2( ), 4( ), other (____)Hours

Serial #: 09230002	Serial #:
Serial #:	Serial #:
Serial #:	Serial #:
Serial #:	Serial #:
Serial #:	Serial #:
Serial #:	Serial #:

Verified By

Sign _____

Print J Becker

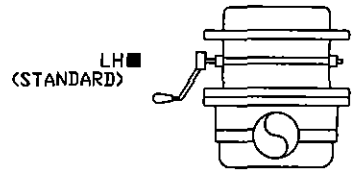

SECTION A-A
SHAFT ORIENTATION

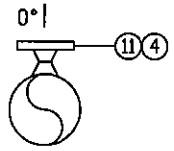

SECTION A-A
COUPLING ORIENTATION

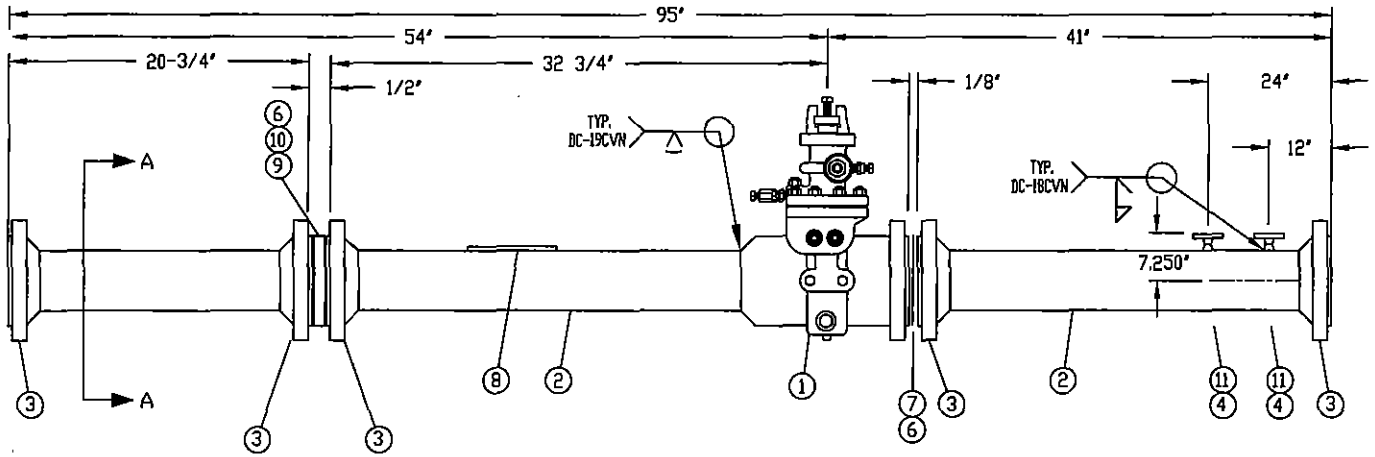

FLOW DIRECTION

4x160-016N-WCB-FF

BILL OF MATERIAL (ONE RUN ONLY)

ITEM	QTY	DESCRIPTION
1	1	4" s/160 900# RF, MODEL 016C , NACE TRIM
-	-	LCC, SENIOR FITTING
2	3	4" s/160, A333 GR.6 COLD DRAWN SMLS PIPE
3	5	4" s/160 900# RFWN A105N FLANGES
4	2	1 1/2" 900# S/160 RFWN A105N RFWN
6	3	4" 900# 316SS FLEX GASKET (CGI) GRAPH FILLER
7	1SET	(8) 1-1/8"X6-3/4" B7M STUD W/(16)1-1/8"2HM NUTS
8	1	DANIEL NAMEPLATE W/ METER RUN S.N. & TAGGING
-	-	SA-36 OR EQUAL (CS BRACKET, SS NAMEPLATE)
9	1	4" S/160 FLANGE TYPE CPA 50E
-	-	FLOW CONDITIONER, 316SS
10	1SET	CP (8)1-1/8X7-1/4" B7M STUD W/(16)1-1/8"2HM NUTS
11	2	4" X 1 1/2" S/160 WOL A105N
-	-	SP-6 SAND BLAST AND 3 MIL EPOXY PRIMER
-	-	-
-	-	-

NDT REQUIREMENTS

RADIOGRAPHY:	100% ALL WELDS, B31.3N ASNTII
HYDROTEST:	1 HOUR @ 3350 PSI, AFFIDAVIT ONLY.
STRESS RELIEF:	YES
HARDNESS TEST:	YES
MAGNETIC PARTICLE:	NO
LIQUID DYE PENETRANT:	NO

INSPECTION	YES	NO
STANDARD 14.3 Verification	X	
FULL 14.3 VERIFICATION (RUN & ORIFICE PLATE)		X
SELECT CHEMISTRY: FOR SA-333 GR 6 PIPE	X	
MAX CARBON CONTENT : 0.23%		
CE= C + MN/6 + (Cr + Mo+V)/5 + (Ni+Cu)/15 <= 0.43		

NOTES & TAGGING

1) MANUFACTURED, INSPECTED, TESTED IN ACCORDANCE WITH ASME B31.3
2) DIMENSIONS AS PER CPA RECOMENDATIONS.
3) AGA 3/API 14.3, Part 2, 4th Edition, 2000
4) TAG: FE-250
5) 4" CAT 500 ORIFICE PLATE 316SS BEVEL BORE 2.125"
6) SELECT CHEMISTRY APPLIES FOR SA-333 GR 6 PIPE

SPECIFICATIONS

QUANTITY:	1	
LINE SIZE:	4"	SCH: 160
RATING:	900# / DMT = -20 DEG F	
MODEL:	016C , WCB	
TYPE:	FLANGNEK SENIOR	
TRIM:	NACE	
AGA FIG:	CPA 50E	BETA: 0.75
CRN:	0F0939.21	0F0634.21

APPROVED FOR CONSTRUCTION: M. Pavelec Apr 30 2009

REV	yy/mm/dd	INI
4		
3		
2		
1	-	-

DANIEL INDUSTRIES CANADA
PHONE: (403) 279-1879
FAX: (403) 236-1337

THIS DRAWING IS THE PROPERTY OF DANIEL CANADA, AND MUST NOT BE USED EXCEPT IN CONNECTION WITH OUR WORK. IT SHALL NOT BE REPRODUCED, AND SHALL BE RETURNED TO US ON DEMAND.

HUSKY OIL OPERATIONS C/O GAS LIQUIDS ENG LTD
4" 900# S/160 RFWN SENIOR METER RUN -NACE

P.O.#: 8400030069 | DATE: 09-04-24

END USER: HUSKY OIL OPERATIONS LTD | LOCATION: LSD: B-49-C/93-P-2

DRAWN BY: AD/MP | DWG#: DC-W-09-7027815-1 | REV: 01

1-7.09.

WO# 27282 4" S/160 A333GR6.
1 PCE PIPE 24MT HT: 806.

SUZHOU SEAMLESS STEEL TUBE WORKS

INSPECTION TEST CERTIFICATE (EN10204-3.1B)

CUSTOMER: AMERICAN PIPING PRODUCTS.INC.
PRODUCT: COLD DRAWN SEAMLESS TUBE

CERTIFICATE NUMBER:806-36
CUSTOMER P/O NUMBER:PO10381
ISO REGISTRATION NO: 0702B00303ROM

SPEC: SA333GR.6,A333GR.6, ASTM A53-B, ASME SA53-B, ASMESA106-B ASTM A106-B, ASMESA106-C,ASTM A106-C, API5L-B(PSL1),NACE MR0175
EFFECTIVE YEAR: ASTM 04B/ASME 2004

TAL: 262 PIECES 65946KG PACKING IN BUNDLES

HEAT NO.	BATCH NO.	STEEL GRADE	SIZE mm	PIECES	WEIGHT kg	CHEMICAL COMPOSITION% C	Mn	S	P	Si	Cr	Ni	Cu	Mo	V	Ti	B	W	Al
805A-30	327	CARBON STEEL	1.1/2 "X SCH80	30	1398	0.17	1.33	0.009	0.015	0.36	0.04	0.02	0.03	0.002	0.002				
806-6	7	CARBON STEEL	4.500" X 0.674"	175	49058	0.15	1.34	0.017	0.017	0.30	0.01	0.01	0.01	0.007	0.002				
806-6	46	CARBON STEEL	4.500" X 0.674"	10	2884	0.15	1.34	0.017	0.017	0.30	0.01	0.01	0.01	0.007	0.002				
806-27	147	CARBON STEEL	4.500" X 0.674"	44	12150	0.15	1.34	0.017	0.017	0.30	0.01	0.01	0.01	0.005	0.002				
804A-26	241	CARBON STEEL	3" XSTD	3	456	0.17	1.24	0.003	0.013	0.34	0.05	0.03	0.09	0.002	0.003				

MECHANICAL PROPERTIES						TECHNOLOGICAL PROPERTIES		NONDESTR-UCTIVE TEST		SURFACE QUALITY		DIMENSION TOLERANCE
YIELD POINT σ_s MPa	TENSION σ_b MPa	ELONGATION δ%	BEND TEST	Charpy-45°C Impact Test Sample Size Longitude	HYDROLIC Psi(Mpa) Time: 5s	FLATTENING TEST	AVG Impact Test	100% E.T.	100% U.T.	IN	OUT	O.D/W.T/L.G
355/360	525/535	42.0/40.5	GOOD	(10*3.33) 62 57 67	2500psi(17)	---	62	GOOD	---	GOOD	GOOD	GOOD
310/305	505/500	26.5/27.0	—	(10*10) 72 71 70	2800psi(19)	---	71	GOOD	—	GOOD	GOOD	GOOD
315/310	510/505	26.0/26.5	—	(10*10) 74 71 70	2800psi(19)	---	71.7	GOOD	—	GOOD	GOOD	GOOD
305/310	500/510	27.0/26.0	---	(10*10) 70 73 71	2800psi(19)	---	71.3	GOOD	—	GOOD	GOOD	GOOD
345/350	505/510	40.5/40.0	—	(10*10) 120 107 124	2500psi(17)	GOOD	117	GOOD	—	GOOD	GOOD	GOOD

EMARKS: HEAT TREATMENT:860° C+/-20° C (IE.NORMALIZED) NACE MR0175-2003 PED 97/23/CE
FREE OF MERCURY CONTAMINATION
NO REPAIR BY WELDING
: STATE THAT THE GOODS ARE FREELY IMPORTABLE AS PER EXPORT IMPORT POLICY 2004-2009

Q/C MANAGER: 张丁强 STAMPER: SUZHOU SEAMLESS STEEL TUBE WORKS SUZHOU CHINA DATE:May. 27, 2008

Ln#: 1
SO#: S207025
Heat#: 806-6
Qty: 0
To: SCOT-BROOKSHIRE
Date: 12/12/2008
Part: 4500674GR6
From: American Piping
PO#: 113-673140

Product#. . . : 1-601-62-078
Customer Part#: 016-4C
Customer. . . : Daniel Industries
Accounts Payable
P. O. Box 19097
Houston TX 77224-9097

I certify that the contents of this report are correct and accurate and meet the requirements of the purchase order and the required material specification.

Cunmin Wang Chief Metallurgist

ACID ELECTRIC MELTED

THIS CERTIFICATION MEETS THE REQUIREMENTS OF EN10204, 3.1

Melt#	Quantity	Date	Heat Treat	Serial No.	Specification
T-0571	5	4/15/09		-00021-	ASTM A352 LCC (M130)

. . . . . C H E M I C A L S . . . . . .

C :.1500	MN:.7900	P :.0160	S :.0090
SI:.3100	NI:.4200	CR:.0800	MO:.0300
AL:.0430	CU:.0400	V :.0050	

. . . . . P H Y S I C A L S . . . . . .

DIA TEST PC		AREA IN2	
EXTENSIN IN		YIELD PSI	55900
-TENSILE PSI	78100	ELONGATIN %	33
REDOF AREA %	72.7	CVN FT/LB	45,62,59
CVN TEMP	@-50F	BRINELL	163-179
TEST MATRL		ANNEAL T&T	
NORM T&T		AUSTENTZ T&T	
H2OQ DAT&CHT		TEMPER T&T	
STRS T&T			

MATERIAL CERTIFICATION

TO

Daniel Ind. M&C - Mechanical
5650 Brittmoore Road
Houston, TX 77041

CASTING DATA

Heat No	Qty	Part No.	P.O. No.
N357	1	900-4T	216094-000

SPECIFICATION

Daniel PMA-A352-03 Rev. A.

ASTM A352 Grade LCC Modified. Complies: NACE MR-01-75, latest revision. Quality Electric Steel Castings, L.P. declares that the products supplied are in compliance with the requirements of the order and EN 10204:2004 Type 3.1.

CHEMICAL DATA

C	Mn	Si	P	S	Cr	Ni	Mo	V	Cu	W	Al	N
.19	.83	.52	.013	.009	.26	.16	.06	.009	.14	.008	.053	.01

TENSILE DATA

Tensile		Yield		% El-2"	% Red Area	HBW
91,640	PSI	67,970	PSI	26	65.2	192

CHARPY DATA

Temp °F -50 °C %Shear=50-50-45; Mils Lateral Exp=36-31-28

64-57-45 Joules

HEAT TREAT

		Hrs At Heat	Coolant
Normalize	1650 °F	5	Air
Quench	1650 °F	5	Water
Temper	1150 °F	5	Air
Temper	°F		
	°F		

COMMENTS

Quality System Certification by Lloyd's Register Quality Assurance ISO 9001-2000. Certificate Number 112921. May 31, 2011.

ELECTRIC STEEL CASTINGS, INC.
OFFICE & FOUNDRY: 252 McCARTY DRIVE • HOUSTON, TEXAS 77029
713/672-9625 • FAX 713/672-4540
www.qsac.com

By C. B. Bergin Lab Supervisor

Date 4/21/2009

Lab Fs (Rev 4/01)

4" CL 900 W/N FLANGE RF
SCH 160 BORE A105N

HEAT NUMBER : 683494
TRANS AM PIPING PRODUCTS - REV'D BY: 9
Shipment/Seq #: S 8 - 1051

METALFAR

PRODOTTI INDUSTRIALI S.P.A.
23861 CESANA BRIANZA (LC) ITALY
Tel. 031.655441 - Fax 031.655149
MATERIAL TEST DEPARTMENT
SALA PROVE ED ANALISI MATERIALI

COMPANY WITH QUALITY MANAGEMENT SYSTEM CERTIFIED BY DNV = ISO 9001 : 2000 =

INSPECTION CERTIFICATE EN 10204/3.1

CERTIFICATO DI COLLAUDO

TRANS AM PIPING PRODUCTS LTD
9335 ENDEAVOR DRIVE S.E.
CALGARY-ALBERTA T3S 0 A1

N.: 558/ 13/02/2008
INVOICE / *FATTURA*: 410/ 12/02/2008
S.: 53050
DEL. NOTE / *BOLLA*: 767/ 12/02/2008

PAG.: 1

IT CODE / COLATA	HEAT / COLATA	ITEM / POS.	YOUR P.O. / VS. ORDINE	OUR REFERENCE / NS. ORDINE	QUANTITY / QUANTITÀ	DESCRIPTION / DESCRIZIONE		DIM. ACCORDANCE TO / DIM. IN ACCORDO A	VISUAL & DIMENSIONAL / VISIVO E DIMENSIONALE
	35750	0101	CI07-369	07001942 0108		BLIND 1500 RTJ 3"	A105	ASME/ANSI B16.5	SATISFACTORY
	74366.	0014	CI07-509	07002863 0041		W/N 600 RF 1" 160	LF2CL1	ASME/ANSI B16.5	SATISFACTORY
	683494	0062	CI08-124	08000298 0070		W/N 900 RF 4" 160	A105	ASME/ANSI B16.5	SATISFACTORY
	38979	0028	CI07-650	07003986 0036		W/N 600 RF 4" XS	A105	ASME/ANSI B16.5	SATISFACTORY
	38979	0028	CI07-650	07003986 0036		W/N 600 RF 4" XS	A105	ASME/ANSI B16.5	SATISFACTORY
	38979	0043	CI08-124	08000298 0051		W/N 600 RF 4" XS	A105	ASME/ANSI B16.5	SATISFACTORY

IT CODE / COLATA	HEAT / COLATA	ITEM / POS.	MATERIAL / MATERIALE	C %	Si %	Mn %	S %	P %	Cr %	Ni %	Mo %	Ti %	Cu %	V %	Nb %	N %	Al %	C.E. %	ORIGIN / ORIGIN
	35750	0101	ASTM A 105	0.185	0.210	1.100	0.013	0.011	0.110	0.060	0.010	0.019	0.170	0.021	0.000	0.000	0.028	0.411	EUROPE
	74366.	0014	ASTM A350 LF2 CL1/2	0.185	0.210	1.110	0.014	0.015	0.120	0.050	0.010	0.020	0.150	0.023	0.000	0.000	0.026	0.413	EUROPE
	683494	0062	ASTM A 105	0.200	0.235	1.130	0.013	0.011	0.083	0.025	0.007	0.002	0.050	0.001	0.001	0.000	0.031	0.411	EUROPE
	38979	0028	ASTM A 105	0.180	0.220	0.950	0.017	0.013	0.140	0.060	0.010	0.008	0.150	0.003	0.002	0.000	0.010	0.382	EUROPE
	38979	0028	ASTM A 105	0.180	0.220	0.950	0.017	0.013	0.140	0.060	0.010	0.008	0.150	0.003	0.002	0.000	0.010	0.382	EUROPE
	38979	0043	ASTM A 105	0.180	0.220	0.950	0.017	0.013	0.140	0.060	0.010	0.008	0.150	0.003	0.002	0.000	0.010	0.382	EUROPE

IT CODE / COLATA	HEAT / COLATA	ITEM / POS.	TEST SPECIMEN / PROVETTA mm² SECTION / Sezione	TEST SPECIMEN / PROVETTA mm LENGHT / Lunghezza	YIELD POINT / Snervamento N/mm² ≥ 0,2 %	TENSILE STRENGHT / Rottura N/mm² ≥	ELONGATION / Allungamento % ≥	REDUCTION OF AREA / Contrazione % ≥	HARDNESS / Durezza Hb	BEND TEST / Piega	FLATTENING TEST / Schiacciam.	IMPACT TEST - Resilienza Joule / cm² U.M.	TYPE / TIPO 10x10 mm	°C	1	2	3	SHAPE / FORMA 1 = V 2 = □	S	W	X	YIELD POINT / SNERVAMENTO N/mm² ≥ 1,0 %	OUI
	35750	0101	126.60	50.80	378.0	527	28.0	59.0	159-163	0.0	0.0		KV	20	83	86	83	1				0.0	
	74366.	0014	126.60	50.80	340.0	550	32.0	59.0	166-170	0.0	0.0		KV	-50	63	66	63	1				0.0	
	683494	0062	126.60	50.80	326.0	534	31.0	59.0	163-165	0.0	0.0		KV	20	86	88	88	1				0.0	
	38979	0028	126.60	50.80	338.0	508	33.0	60.0	152-156	0.0	0.0		KV	20	88	87	88	1				0.0	
	38979	0028	126.60	50.80	338.0	508	33.0	60.0	152-156	0.0	0.0		KV	20	88	87	88	1				0.0	
	38979	0043	126.60	50.80	338.0	508	33.0	60.0	152-156	0.0	0.0		KV	20	88	87	88	1				0.0	

IT CODE / COLATA	HEAT / COLATA	ITEM / POS.	MATERIAL IN ACCORDANCE TO / MATERIALE IN ACCORDO A	HEAT TREATMENT / TRATTAMENTO TERMICO
	35750	0101	ASTM/ASME A 105/SA 105 M - 05	NORMALIZED AT 920 C - COOLED IN STILL AIR ELECTRIC FURNACE
	74366.	0014	ASTM/ASME A 350/SA 350 M - 04a	NORMALIZED AT 930 C - COOLED IN STILL AIR ELECTRIC FURNACE
	683494	0062	ASTM/ASME A 105/SA 105 M - 05	NORMALIZED AT 920 C - COOLED IN STILL AIR ELECTRIC FURNACE
	38979	0028	ASTM/ASME A 105/SA 105 M - 05	NORMALIZED AT 920 C - COOLED IN STILL AIR ELECTRIC FURNACE
	38979	0028	ASTM/ASME A 105/SA 105 M - 05	NORMALIZED AT 920 C - COOLED IN STILL AIR ELECTRIC FURNACE
	38979	0043	ASTM/ASME A 105/SA 105 M - 05	NORMALIZED AT 920 C - COOLED IN STILL AIR ELECTRIC FURNACE

NOTE
MATERIAL IN ACCORDANCE WITH NACE MR-0175/2003

QUALITY CONTROL DEPARTMENT / UFFICIO CONTROLLO QUALITÀ	INSPECTION AUTHORITY / ENTE UFFICIALE COLLAUDO	MANUFACTURER'S SYMBOL / MARCHIO PRODUZIONE
BRACCHI FLAVIO		MFF

SAN ENG STEEL FORGING CO LTD
311, Jen Hsin Road, Jen Wu Hsiang
Kaohsiung Hsien, Taiwan, R.O.C.
TEL:07-3724249 ; FAX:07-3712923
URL: www.saneng.com.tw
e-mail: saneng@ksts.seed.net.tw

MILL TEST CERTIFICATE

EN10204-3.1.B(DIN50049/3.1.B)
Customer: SEYBOLD INTERNATIONAL CORP.
Order No

Certificate No.: SE8029J2
Date: 04/08/2009
Page: 1 OF 1

PRODUCT	MATERIAL SPECIFICATIONS	DIMENSIONAL SPECIFICATIONS
FORGED CARBON STEEL FLANGES	ASTM A105-05/ASME SA105-07	ASME B16.5-03 CSA Z245.12

Item No.	CODE NO	DESCRIPTION	QUANTITY	C	Si	Mn	P	S	Cu	Cr	Ni	Mo	V	Nb	N			CE(*3)
			Min	-	0.100	0.600	-	-	-	-	-	-	-	-	-			
			Max	0.350	0.350	1.050	0.035	0.040	0.400	0.300	0.400	0.120	0.080	0.020	-			
1	24061-105	900/1500 WNRF S160 1" A105N	10 PCE	0.200	0.200	1.160	0.007	0.011	0.060	0.040	0.030	0.005	0.003	0.005	0.010			0.408
2	24062-105	900/1500 WNRF S160 1 1/2" A105N	10 PCE	0.210	0.160	1.070	0.005	0.008	0.060	0.050	0.030	0.005	0.003	0.005	0.010			0.405
3	24064-105	1500 WNRF S160 3" A105N	25 PCE	0.212	0.280	0.980	0.015	0.021	0.009	0.023	0.050	0.002	0.006	0.005	0.003			0.384
4	24064-105	1500 WNRF S160 3" A105N	25 PCE	0.210	0.160	1.110	0.014	0.015	0.100	0.050	0.070	0.005	0.003	0.005	0.011			0.417

Item No.	Heat No.	T.S.(*1) (MPA)	Y.S.(*1) (MPA)	E.L.(*1) (%)	Hardness (HB)	R.A.(*1) (%)	Impact Test Temp: Minimum: Joule 1	2	3	Material Supplier	HEAT TREATMENT(*2) ☒ N / REMARKS
	Min	485.0	250.0	22.0	-	30.0					
	Max	-	-	-	187	-					
1	13144	519.8	311.9	33.2	150	65.9				OEMK	880℃X5HRS
2	10941	493.3	294.2	37.2	155	65.9				OEMK	CONFORMS WITH NACE MR0175-03 AND MR0103-07/ISO15156.2
3	840700	508.0	300.1	33.0	157	67.0				NTMK	CONFORMS WITH Z245.12 CAT I GR.248 SOUR SERVICE-05
4	48946	521.7	313.8	34.4	157	64.9				OEMK	

*1: T.S. = Tensile Strength, Y.S.=Yield Strength, E.L.=Elongation, R.A.=Reduction of Area.

*2: N=Normalized, A=Annealed, Q=Quenched, T=Tempered, S.T=Solution Treated, S.R=Stress Relieved, A.C=Air Cooled, F.C=Furance Cooled, W.C=Water Cooled, O.C=Oil Cooled.

*3: C.E Value = C + (Mn /6) + (Cr + Mo +V) / 5 + (Ni + Cu) / 15

We hereby certify that the material has been tested in accordance with the above specification and also with the requirements called for by the above order.

SAN ENG STEEL FORGING CO., LTD. QUALITY ASSURANCE DEP'T SE 70.0.7

Manager of Quality Assurance Dep't

WO# 27815 1.5 1500 S160 A105 N FLANGE.
HT: 10941.

WO# 27815
1" 1500 S/160 BLIND FLANGE
HT: 34949.

SAN ENG STEEL FORGING CO LTD
311, Jen Hsin Road, Jen Wu Hsiang
Kaohsiung Hsien, Taiwan, R.O.C.
TEL:07-3724249 ; FAX:07-3712923
URL: www.saneng.com.tw
e-mail: saneng@ksts.seed.net.tw

MILL TEST CERTIFICATE

EN10204-3.1.B(DIN50049/3.1.B)
Customer: SEYBOLD INTERNATIONAL CORP.
Order No.:

Certificate No.: SE8168F1
Date: 03/11/2009

PRODUCT	MATERIAL SPECIFICATIONS	DIMENSIONAL SPECIFICATIONS
FORGED CARBON STEEL FLANGES	ASTM A105-05/ASME SA105-07	ASME B16.5-03 CSA Z245.12

Item No.	CODE NO	DESCRIPTION	QUANTITY	CHEMICAL COMPOSITION (%) C	Si	Mn	P	S	Cu	Cr	Ni	Mo	V	Nb	N			CE(*3)
			Min	-	0.100	0.600	-	-	-	-	-	-	-	-	-			
			Max	0.350	0.350	1.050	0.035	0.040	0.400	0.300	0.400	0.120	0.080	0.020	-			
11	7531699	900/1500 BLRF 1" A105N	19 PCE	0.210	0.180	1.030	0.010	0.007	0.090	0.080	0.060	0.005	0.003	0.005	0.010			0.409
12	7531699	900/1500 BLRF 1" A105N	6 PCE	0.210	0.160	1.070	0.005	0.008	0.060	0.050	0.030	0.005	0.003	0.005	0.010			0.405

Item No.	Heat No.	T.S.(*1) (MPA)	Y.S.(*1) (MPA)	E.L.(*1) (%)	Hardness (HB)	R.A.(*1) (%)	Impact Test Temp: Minimum: Joule 1	2	3	Material Supplier	HEAT TREATMENT(*2) ☒ N / REMARKS
	Min	485.0	250.0	22.0	-	30.0					
	Max	-	-	-	187	-					
11	34949	509.9	306.0	39.0	148	65.9				OEMK	880°CX5HRS CONFORMS WITH NACE MR0175-03 AND MR0103-07/ISO15156.2 CONFORMS WITH Z245.12 CAT I GR.248 SOUR SERVICE-05
12	10941	493.3	294.2	37.2	155	65.9				OEMK	

*1: T.S. = Tensile Strength, Y.S.=Yield Strength, E.L.=Elongation, R.A.=Reduction of Area.

*2: N=Normalized, A=Annealed, Q=Quenched, T=Tempered, S.T=Solution Treated, S.R=Stress Relieved, A.C=Air Cooled, F.C=Furance Cooled, W.C=Water Cooled, O.C=Oil Cooled.

*3: C.E. Value = C + (Mn /6) + (Cr + Mo +V) / 5 + (Ni + Cu) / 15

We hereby certify that the material has been tested in accordance with the above specification and also with the requirements called for by the above order.

Manager of Quality Assurance Dep't

CERTIFIED MILL TEST REPORT

(2)

The Best Value
Price, Quality, Service
All The Time.

LOG NO. 321552 PAGE 2

BONNEY FORGE
P.O. BOX 330 • 14496 CROGHAN PIKE • MOUNT UNION, PA 17066-0330
(814) 542-2545 • (800) 345-7546 • FAX (814) 542-4906
www.bonneyforge.com

CUSTOMER:

Date 05/20/08

CUSTOMER'S Order No. 4883749-00

Bonney Order No. 0000033088

SHIPPED T

WO# 27815
(2) 6X1½ S/160 WOL'S
HT: 56518

EDMONTON, ABT6B 3G2 Canada

ITEM	QUANTITY	LOT NO.	GRADE OR SPECIFICATION NO. CHEMICAL ANALYSIS, PHYSICAL PROPERTIES, REMARKS:
			SA/A105N
006	25	56518	7551363 8-4X11/2 S160 A105N WELD B C .190 MN 1.100 P .006 S .022 SI .210 NI .040 CU .140 CO .004 CR .050 MO .010 V .000 AL .024 NB .010 CE(LONG FORMULA) = 0.40 T/S 76000 Y/S 53500 EL 32.85 RA 70.75 BRINELL HARDNESS1: 137 HARDNESS2: 139
007	25	56667	7550015 21/2-11/4X1/4 3M A105N THRD T C .190 MN 1.000 P .010 S .023 SI .200 NI .040 CU .130 CR .050 MO .010 V .002 AL .021 NB .015 CE(LONG FORMULA) = 0.38 T/S 72500 Y/S 49500 EL 36.00 RA 70.00 BRINELL HARDNESS1: 144 HARDNESS2: 144
008	75	3238	7550076 36-3 X 1/4 3000 A105N THRD T C .190 MN 1.200 P .008 S .022 SI .180 NI .030 CU .150 CO .003 CR .050 MO .010 V .000 AL .026 NB .013 CE(LONG FORMULA) = 0.41 T/S 78500 Y/S 55625 EL 33.00 RA 72.05 BRINELL HARDNESS1: 139 HARDNESS2: 141
009	750	57440	7551568 5 -3 X 3/4 3000 A105N THRD T C .200 MN .990 P .012 S .020 SI .170 NI .030 CU .120 CO .003 CR .160 MO .010 V .000 AL .021 NB .013 CE(LONG FORMULA) = 0.41 T/S 75255 Y/S 51786 EL 28.65 RA 64.18 BRINELL HARDNESS1: 127 HARDNESS2: 127

***** CONTINUED ON NEXT PAGE *****

We certify that the data on this sheet is a true copy taken from our records of material furnished us by the production mill, or as obtained by additional laboratory checks.

by

Cris Boozel

CMTR: REV 1

QUALITY PROCESS MANAGER

CERTIFIED MILL TEST REPORT

The Best Value
Price, Quality, Service
All The Time.

LOG NO. 321552 PAGE 6

BONNEY FORGE
P.O. BOX 330 • 14496 CROGHAN PIKE • MOUNT UNION, PA 17066-0
(814) 542-2545 • (800) 345-7548 • FAX (814) 542-4906
www.bonneyforge.com

CUSTOMER:

Date 05/20/08

CUSTOMER'S Order No. 4883749-00

Bonney Order No. 1000033088

SHIPPED TO

ITEM	QUANTITY	LOT NO.	GRADE OR SPECIFICATION NO. CHEMICAL ANALYSIS, PHYSICAL PROPERTIES, REMARKS.

1. THE FITTINGS SUPPLIED ARE IN ACCORDANCE WITH PURCHASE ORDER SPECIFICATIONS.
2. THE MATERIAL SUPPLIED IDENTIFIED AS A105N WAS NORMALIZED IN ACCORDANCE WITH ASTM A105 HEAT TREATING REQUIREMENTS.
3. CERTIFYING ASTM A105-05 / ASME SA105-04 EDITION.
4. ELONGATION TEST RESULTS ARE OBTAINED USING STANDARD ROUND SPECIMEN, 2 INCH OR 50 MM GAGE LENGTH.
5. THE PRODUCT SUPPLIED WAS INSPECTED IN ACCORDANCE WITH EN 10204:2004 EDITION TYPE 3.1 INSPECTION DOCUMENT. (EUROPEAN STANDARD)
6. THE MATERIAL SUPPLIED MEETS THE REQUIREMENTS OF BOTH NACE MR0103-2005 AND NACE MR0175-2002.

***** END OF CERTIFICATION *****

We certify that the data on this sheet is a true copy taken from our records of material furnished us by the production mill, or as obtained by additional laboratory checks

by

Cris Boozel

QUALITY PROCESS MANAGER

CMTR: REV 1

MS-18378

EMERSON
Process Management

Daniel Industries Canada Inc.
P.O. Box 727, Stn T (T2H 2H2)
4215 – 72 Avenue S.E.
Calgary, Alberta T2C 2G5
Canada

T 403-279-1879
F 403-236-1337
www.daniel.com

Meter Tube Nameplate Facsimile

For use with AGA Report 3/API 14.3, Part 2, Third and Fourth Editions

DANIEL a division of Emerson Process Management — Made in Canada

DATE:	6/3/09	AGA FIG:	CPA50E 2000	UL:	79.988
TAG:	FE-200	MAX BETA:	.75	DL:	67.094
S/N:	DCM09-01172	MAX ORIFICE:	3.890	Dr:	5.187
CRN:	OFO634.21	MIN ORIFICE:	.778	ANSI/DMT:	900-20 F

Daniel Industries Canada Ph: 403-279-1879 Fax: 403-236-1337

Daniel Canada WO: 7027815-2 Orifice Fitting S/N: 09110189

Rev 1, 2004-11-29

DANIEL®

EMERSON
Process Management

Orifice Meter Inspection Certificate

AGA3/API 14.3, Part 2, 2000 Edition

DANIEL®
Daniel Industries Canada Inc.

Customer Information

Customer:	HUSKY ENERGY
Customer P.O.:	8400030069
Customer Job No.:	7027815
Location/LSD:	N/A
Meter Tag No.:	FE-200
Meter Name:	N/A

General Meter Tube Information

Inspection Number:	
Meter Tube Serial No.:	DCM09-01172
Manufacturer:	Daniel Canada
Inspection Criteria:	AGA3/API 14.3, Part 2, 2000 Edition
AGA3 Configuration:	CPA 50E
Nominal Line Size:	6"
Pipe Schedule:	160
Published I.D. (in.):	5.187"

Measured Internal Diameter of Meter Tube

Position	I.D. Measurements 1" Upstream from the Upstream Face of Orifice Plate (in.)
1	5.187
2	5.187
3	5.187
4	5.188

Calculations	
Coefficient of Thermal Expansion, α_2:	0.00000620
Meter Tube Temperature, T_m (°F):	71.4
Reference Temperature, T_r (°F):	68.0
Measured Meter Tube I.D., D_m (in.):	5.187
Calculated Meter Tube I.D., D_r (in.):	5.187

Verification of the Internal Diameter of the Meter Tube

Note: Internal diameter measurements are checked in a minimum of 4 equally spaced planes at various locations along the length of the meter tube. Max./Min. values for various sections of the meter tube are recorded below. Locations of these check measurements include the orifice fitting, welds, adjoining flanges and pipe.

	Within $1D_m$ Upstream of Orifice Plate	Downstream	Entire Upstream Secton	
Tolerance (in.):	0.013	0.026	**Max. Tolerance (%):**	0.500
Allowable Max. (in.):	5.200	5.213	**Recorded Max. (in.):**	5.195
Allowable Min. (in.):	5.174	5.161	**Recorded Min. (in.):**	5.175
Recorded Max. (in.):	5.188	5.188	**Actual Tolerance (%):**	0.386
Recorded Min. (in.):	5.187	5.179	**Results:**	Pass
Results:	Pass	Pass		

Orifice Plate and Sealing Unit

	Max.	Min.				U/S	D/S
Beta Ratio:	0.75	0.15	**Orifice Plate Thickness:**	0.125"	**Plate Seal Protrusion:**	Pass	Pass
Bore Size (in.):	3.890	0.778	**Orifice Plate Eccentricity:**	Pass	**Plate Seal Gap:**	Pass	Pass
			Orifice Plate Bypass:	Pass			

Internal Surface Roughness

Within 17*D* U/S of Plate:	Pass
Beyond 17*D* U/S of Plate:	Pass
Downstream of Plate:	Pass

Meter Tube Configuration and Dimensions

Flow Conditioner or Vane: CPA 50E

1st. Downstream Connection: 1-1/2" Flange

Note: All dimensions are shown in inches unless specified otherwise.

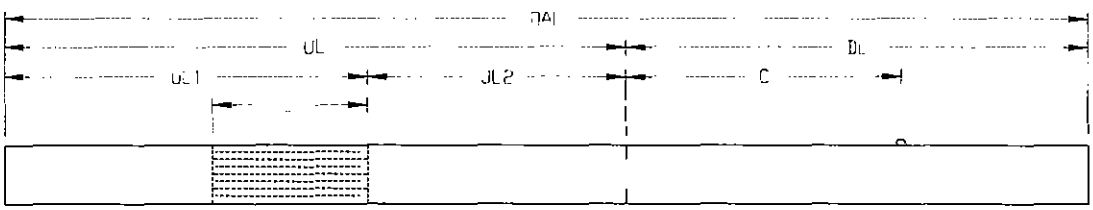

OAL:	147.082
UL:	79.988
UL1:	31.688
UL2:	48.300
L:	0.776
DL:	67.094
C:	25.244

Orifice Fitting Information

Manufacturer:	Daniel	**Quantity:**	2 Sets
Model No.:	016C	**Diameter:**	Pass
Serial No.:	09110189	**Location:**	Pass
ANSI Class:	600#	**Size:**	1/2"

Flange Tap Information

Flange Taps Relative to Center of Meter Tube: Horizontal

No. of DP Sensors: None

	Location	Tee'd
Static Pressure Sensor:	None	No

Comments and Notes *(indicate if attachments are included)*

Inspection Kit Number: 2 NOA Number: G-0196 r1

Inspector	Jamie van der Laan	*Witness*	
Signed		*Signed*	
Date	June 4, 2009	*Date*	

P.O. Box 727, Stn. T, (T2H 2H2)
4215-72 Ave. S.E., Calgary, AB T2C 2G5

Ph.: (403) 279-1879
Fax: (403) 236-1337

Certificate of Inspection - Daniel Industries Canada

Customer: HUSKY ENERGY **Address:**	**Supplier Name:** DANIEL INDUSTRIES CANADA **Address:**
P/N or Cross-Reference: AGA Report 3/API 14.3, Part 2, Fourth Edition, April 2000. **Rev:**0 **Part Description:** Orifice Meter Tube Inspection AGA 3 2000.	**Product Line:** Orifice Fittings **Technical Contact:** Tom Nelson
Test Area: All	**Date and Time:** 06/05/2009 09:15 AM
Inspector: Jamie van der Laan	**Daniel Canada Serial Number:** DCM09-01172
Control Number:	
	Lot Test Results: Pass
	Copy To Production Control: Thomas Weissig
Special Notes: Text: CAR?: NCMR? SCAR?	**Disposition:** Non-Conforming Storage Area **Reason For Disposition (if applicable):**

Special Instructions:
Description of item under test: 6" 016C 900# sch.160 NACE TRIM LCC SN METER RUN

These inspections and tests establish conformance to the requirements of;

- Customer Purchase Order #: 8400030069
- Daniel Ind. Work Order #: 7027815
- Specification AGA 3 2000
- Specification AGA 3 2000 AND Measurement Canada
  - NOA G-0196 r1 for Senior Orifice Meters

7027815-2 DCM09-01172.p 7027815-2 DCM09-01172.cal.p

Orifice Meter Tube Inspection Sequence

This meter run meets AGA figure CPA50E and passes with a Beta of: .75

Note : If a meter run passes all the Tests below, a verification sticker will be applied to the meter.

Test Conducted	Test Description	Test Results (as applicable)	
Meter Tube Location, Length and Beta	Ensure that meter tube location meets the specification(s) defined above, and that all lengths meet/exceed minimum requirements for the specific configuration and Beta.		
Orifice Plate Centering	Ensure that Orifice Fitting is capable of holding the plate concentric to the pipe I.D., as specified above.		
Meter Tube I.D.	Ensure that the I.D. of the meter tube meets the specification(s) defined above.		
Meter Tube Roughness	Ensure that the I.D. roughness of the meter tube meets the specification(s) defined above		

Orifice Plate Seal Protrusion	Ensure that the Orifice Plate Sealing device does not protrude into the meter tube.		
Orifice Plate Seat Gap	Ensure that any recess adjacent to the Orifice Plate meets the specification(s) defined above.		
Tap Hole Size and Condition	Ensure that the size and condition of the flange taps meets the specification(s) defined above.		
Tap Hole Location	Ensure that Flange Taps are located 1" from each respective face of the orifice plate - within the tolerances specified above.		

EMERSON
Process Management

DANIEL
Daniel Industries Canada Inc.

Flow Conditioner Inspection Certificate

Inspection Criteria: ***PS-G-05 for CPA 50E Flow Conditioners***

CPA-50E Flow Conditioner Inspection Worksheet

Date:	June. 3. 09.
Inspection Number:	DCFC09-01056
Inspected By:	Jamie van der Laan

Customer Information

Customer:	HUSKY ENERGY
Customer P.O.:	8400030069
Customer Job No.:	7027815-2
Location/LSD:	N/A
Meter Tag No.:	N/A
Meter Name:	N/A
Meter Tube S.N.:	SN: 09110189 DCM09-01172

General Flow Conditioner Information

Nominal Line Size:	6"	ANSI Rating:	300-900
Pipe Schedule:	sch.160	Serial Number:	1222107
Published I.D.	5.189"		

Inspection and Verification

Chamfers:

Upstream Side		Downstream Side	
Yes		Yes	

			Center Ring of 8 Holes				Outer Ring of 16 Holes						
NPS	Sch.	Published	Center Hole Dia.		Hole Dia.		Pitch Circle Dia.		Hole Dia.		Pitch Circle Dia.		Plate Thickness		Plate Dia.
													Actual	.776"	
			Pass	.968"	Pass	.846"	Pass	2.590"	Pass	.626"	Pass	4.408"	Pass		Pass

NPS	Sch.	I.D.	Max.	Min.	Max.	Min.	Max.	Min.	Max.	Min.	Max.	Min.	Max.	Min.	Max.
6"	160	5.189	1.017	0.913	0.898	0.794	2.646	2.543	0.675	0.571	4.463	4.359	0.830	0.597	5.189

Coments and Additional Information

Inspector Signed	Jamie van der Laan	*Witness Signed*	
Date	June 3, 2009	*Date*	

PO Box 727, Stn. T, (T2H 2H2)
4215-72 Ave. SE, Calgary, AB

Ph.: (403) 279-1679
Fax: (403)236-1337

Certificate of Inspection - Daniel Industries Canada

Customer: HUSKY ENERGY **Address:**	**Supplier Name:** Canadian Pipeline Accessories Company Ltd. **Address:** 6710 -30 Street S.E. Calgary, AB T2C 1N9
P/N or Cross-Reference: AGA Report 3/API 14.3, Part 2, Fourth Edition, April 2000. **Rev:**1 **Part Description:** CPA 50E/TBR Flow Conditioner Inspection	**Product Line:** Flow Conditioner **Technical Contact:** Tom Nelson
Test Area: All	**Date and Time:** 06/05/2009 09:13 AM
Inspector: Jamie van der Laan	**Daniel Canada Serial Number:** DCFC09-01056
Control Number:	
	Lot Test Results: Pass
	Copy To Production Control: Thomas Weissig
Special Notes: Text: CAR?: NCMR? SCAR?	**Disposition:** Non-Conforming Storage Area **Reason For Disposition (If applicable):**

Special Instructions:
Description of item under test: 6" sch.160 316SS FLANGE TYPE FLOW CONDITIONER

This inspection and test plan meets the requirements of Measurement Canada for custody transfer applications.

Customer Purchase Order Number: 8400030069 Serial Number: 1222107
Daniel Industries Canada Work Order Number: 7027815

Test Certificate Attached:

7027815-2 DCFC09-01056.p

Following this inspection, the Inspection Record and Certificate shall be marked Approved or Rejected, with particulars documented on the Inspection Certificate as applicable.

Test Conducted	Test Description	Test Results (as applicable)	
CPA 50E/TBR Flow Conditioner Inspection	Ensure that all critical dimensions meet the current revision of the Measurement Canada provisional specification PS-G-05 & PS-G-11 Document particulars on a Inspection Certificate		

WESTERN INSPECTION LTD.
3231 - 58th AVENUE, S.E., CALGARY
ALBERTA T2C 0B4
TEL: (403) 279-4540
FAX: (403) 236-3043

RADIOGRAPHIC EXAMINATION REPORT #CGY-335930

Daniel Industries Canada
4215 - 72 Avenue S.E.
Calgary, AB T2C 2G5
Tel: (403) 539-4247 Fax: (403) 236-1337

Job Number: 27815-2
PO Number: 4307

Date of Exam: Monday, Jun 1 2009
Job Location: Western's Shop
Technicians: Robert Bodman SNT Lev. II

Acc Codes: ANSI/ASME B31.3 Normal
Inspected: Pre Heat Treat
Material: Carbon Steel
Isotope: IR 192
Focal Spot: 2x3 mm
Curies: 39
Degree: 100%
Processing: Automatic
Units: in

Legend:

# (Loading)	S = Single
	D = Double
	T = Triple
# (Result)	ACC = Accept
	REJ = Reject
	RETEST = Retest
@ (Degree)	1 = Acceptable
	2 = Slight
	3 = Reject

Note: SFD Does not include reinforcement

Test Information													Result Information		
Comp#	Test#	Tech	IQI	Wldr	Dia	Thk	Len	Sch	SFD	#	Films	Type	#	@ Discontinuity	From - To
1	X1	RT2-T	#17	X	1.5	0.281		160	15.0	S	3	D5-GEV-I	ACC		
2	X2	RT2-T	#17	X	1.5	0.281		160	15.0	S	3	D5-GEV-I	ACC		
3	X3	RT2-T	#17	X	1.5	0.281		160	15.0	S	3	D5-GEV-I	ACC		
4	X4	RT2-T	#15	X	1	0.25		160	15.0	S	3	D5-GEV-I	ACC		

RT 2: T.291 g) S.O.D., nominal pipe diameter times 7. T.291 h) S.S.O.F.D., nominal pipe diameter plus reinforcement.

Units:

Qty	Code
1	NDE/TAN/00
3	NDE/TAN/00

Sign Here: _____
Donald Mitchell CGSB Lev. II, SNT Lev. II

Sign Here: _____
Customer Representative:

IMPORTANT: Please Sign And Return the Yellow Copy to Western Inspection Ltd. A.S.A.P.

6/1/2009 12:03:46 PM

WESTERN INSPECTION LTD.
3231 - 58th AVENUE, S.E., CALGARY
ALBERTA T2C 0B4
TEL: (403) 279-4540
FAX: (403) 236-3043

RADIOGRAPHIC EXAMINATION REPORT #CGY-335996

Daniel Industries Canada
4215 - 72 Avenue S.E.
Calgary, AB T2C 2G5
Tel: (403) 539-4247 Fax: (403) 236-1337

Job Number: 27815-2
PO Number: 4311

Date of Exam: Tuesday, Jun 2 2009
Job Location: Western's Shop
Technicians: Robert Bodman SNT Lev. II

Acc Codes: ANSI/ASME B31.3 Normal
Inspected: Pre Heat Treat
Material: Carbon Steel
Isotope: IR 192
Focal Spot: 2x3 mm
Curies: 39
Degree: 100%
Processing: Automatic
Units: in

Legend:

↕ (Loading)	S = Single
	D = Double
	T = Triple
# (Result)	ACC = Accept
	REJ = Reject
	RETEST = Retest
@ (Degree)	1 = Acceptable
	2 = Slight
	3 = Reject

Note: SFD Does not include reinforcement

Comp#	Test#	Tech	IQI	Wldr	Dia	Thk	Len	Sch	SFD	↕	Films	Type	#	@ Discontinuity	From - To
1	X5	RT3	1B	X	6	0.719		160	3.312	S	2	D5-GEV- I	ACC		
2	X6	RT3	1B	X	6	0.719		160	3.312	S	2	D5-GEV- I	ACC		
3	X7	RT3	1B	X	6	0.719		160	3.312	S	2	D5-GEV- I	ACC		
4	X8	RT3	1B	X	6	0.719		160	3.312	S	2	D5-GEV- I	ACC		
5	X9	RT3	1B	X	6	0.719		160	3.312	S	2	D5-GEV- I	ACC		
6	X10	RT3	1B	X	6	0.719		160	3.312	S	2	D5-GEV- I	ACC		

RT 3: T.291 g) S.O.D., half of the pipe I.D. less 1/2 of max. allowable reinforcement. T.291 h) S.S.O.F.D., nominal wall thickness plus reinforcement.

Units:

Qty	Code
6	6/160/00

Sign Here: _____
Donald Mitchell CGSB Lev. II, SNT Lev. II

Sign Here: _____
Customer Representative:

IMPORTANT: Please Sign And Return the Yellow Copy to Western Inspection Ltd. A.S.A.P.

6/2/2009 11:53:27 AM

WESTERN INSPECTION LTD.
3231 - 58th AVENUE, S.E., CALGARY
ALBERTA T2C 0B4
TEL: (403) 279-4540
FAX: (403) 236-3043

MPI EXAMINATION REPORT #CGY-336068

Daniel Industries Canada
4215 - 72 Avenue S.E.
Calgary, AB T2C 2G5
Tel: (403) 539-4247Fax: (403) 236-1337

Job Number: 27815-2
PO Number: 4315

Date of Exam: Wednesday, Jun 3 2009
Job Location: Customer's Shop
Technicians: John Koncar CGSB Lev. II, SNT Lev. II

Acc Codes: ANSI/ASME B31.3 Normal
Inspected: Post Heat Treat
Material: Carbon Steel
Surface: Good
Procedure: MPI-1 / Dry Visible
Technique: Yoke
Particle: Magnaflux Red oxide #8A with Contrast Paint
Equipment: AC Yoke
Lighting: Daylight
Units: in

Results: ACC = Accept
REJ = Reject
RETEST = Retest

Test Information							Result Information		
Comp#	Test#	Wldr	Dia	Sch	Len	Description	Result	Discontinuity	Frm - To
1	1					3-- 11/2" WOL	ACC		
2	2					1--1" WOL	ACC		

Charges:

Qty	Units	Type	SubType	Rate	Code
0.3	Hr(s)	Level II	Chargeable	Regular	NDE/L2/C/A-/00
0.3	Hr(s)	Consumables	LPI/MPI Consumables	N/A	NDE/CON/LMC/NA/00

Sign Here: _____
John Koncar CGSB Lev. II, SNT Lev. II

Sign Here: _____
Customer Representative:

IMPORTANT: Please Sign And Return the Yellow Copy to Western Inspection Ltd. A.S.A.P.

This Report Supersedes All Previous Copies.(req 2)

6/4/2009 3:40:28 PM

WESTERN INSPECTION LTD.
3231 - 58th AVENUE, S.E., CALGARY
ALBERTA T2C 0B4
TEL: (403) 279-4540
FAX: (403) 236-3043

HRD EXAMINATION REPORT #CGY-336070

Daniel Industries Canada
4215 - 72 Avenue S.E.
Calgary, AB T2C 2G5
Tel: (403) 539-4247Fax: (403) 236-1337

Job Number: 27815-2
PO Number: 4315

Date of Exam: Wednesday, Jun 3 2009
Job Location: Customer's Shop
Technicians: John Koncar

Acc Codes: ANSI/ASME B31.3 Normal
Material: Carbon Steel
Surface: Good
Inspected: Post Heat Treat
Procedure: HRD-1
Equipment: Krautkramer Micro-Dur 10/Telebrinell
Penetrator: Standard
HT Scale: Brinell
Units: in

Test Information					Result Information
Comp#	Test#	Wldr	Dia.	Sch.	Description	Locations and Readings
1	1		1.5		BW	Weld 160, Haz 150, PM 160
2	2		1.5		BW	Weld 150, Haz 145, PM 135
3	3		1.5		BW	Weld 155, Haz 150, PM 145
4	4		1		BW	Weld 165, Haz 160, PM 160
5	5		6		BW	Weld 160, Haz 145, PM 135
6	6		6		BW	Weld 160, Haz 150, PM 140
7	7		6		BW	Weld 160, Haz 140, PM 140
8	8		6		BW	Weld 160, Haz 135, PM 135
9	9		6		BW	Weld 160, Haz 135, PM 135
10	10		6		BW	Weld 160, Haz 140, PM 150

Charges:

Qty	Units	Type	SubType	Rate	Code
1	Hr(s)	Level II	Chargeable	Regular	NDE/L2/C/A-/00
30	Hit(s)	Equipment Cost	Electronic Hit	N/A	HRD/EQP/ELC/NA/00

Sign Here: _____
John Koncar

Sign Here: _____
Customer Representative:

IMPORTANT: Please Sign And Return the Yellow Copy to Western Inspection Ltd. A.S.A.P. This Report Supersedes All Previous Copies.(req 2) 6/3/2009 3:55:20 PM
This Report and all associated materials remain the sole property of Western Inspection Ltd. until such time as they are paid for in full.

WESTERN INSPECTION LTD.
3231 - 58th AVENUE, S.E., CALGARY
ALBERTA T2C 0B4
TEL: (403) 279-4540
FAX: (403) 236-3043

HRD EXAMINATION REPORT #CGY-336967

Daniel Industries Canada
4215 - 72 Avenue S.E.
Calgary, AB T2C 265
Tel: (403) 539-4247Fax: (403) 236-1337

Job Number: 27815
PO Number: JASON

Date of Exam: Wednesday, Jun 24 2009
Job Location: Customer's Shop
Technicians: John Koncar

Acc Codes: ANSI/ASME B31.3 SEVERE / HUSKY PS-MW-01
Material: Carbon Steel
Surface: Good
Inspected: Post Heat Treat
Procedure: HRD-1
Equipment: Krautkramer Micro-Dur 10/Telebrinell
Penetrator:
HT Scale: Vickers
Units: in

Comp#	Test#	Hldr	Dia.	Sch.	Description	Test Information	Result Information: Locations and Readings

Charges:

Qty	Units	Type	SubType	Rate	Code
1.5	Hr(s)	Level II	Chargeable	Regular	NDE/L2/C/A-/00
90	Hit(s)	Equipment Cost	Electronic Hit	N/A	HRD/EQP/ELC/NA/00

Sign Here: _____
John Koncar

Sign Here: _____
Customer Representative:

IMPORTANT: Please Sign And Return the Yellow Copy to Western Inspection Ltd. A.S.A.P.
This Report and all associated materials remain the sole property of Western Inspection Ltd. until such time as they are paid for in full.

6/24/2009 11:46:32 AM

WESTERN INSPECTION LTD.
3231 - 58th AVENUE, S.E., CALGARY
ALBERTA T2C 0B4
TEL: (403) 279-4540
FAX: (403) 236-3043

MPI EXAMINATION REPORT #CGY-336966

Daniel Industries Canada
4215 - 72 Avenue S.E.
Calgary, AB T2C 2G5
Tel: (403) 539-4247Fax: (403) 236-1337

Job Number: 27815
PO Number: JASON

Date of Exam: Wednesday, Jun 24 2009
Job Location: Customer's Shop
Technicians: John Koncar CGSB Lev. IIREG# 1566, SNT Lev. II

Acc Codes: ANSI/ASME B31.3 Severe / HUSKY PS-MH-01
Inspected: Post Heat Treat
Material: Carbon Steel
Surface: Good
Procedure: MPI-1 / Wet Fluorescent
Technique: Yoke
Particle: Green Fluorescent
Equipment: AC Yoke
Lighting: Blacklight
Units: in

Results: ACC = Accept
REJ = Reject
RETEST = Retest

Test Information							Result Information		
Comp#	Test#	Wldr	Dia	Sch	Len	Description	Result	Discontinuity	Frm - To
1	1					2--WOL	ACC		

Charges:

Qty	Units	Type	SubType	Rate	Code
0.5	Hr(s)	Level II	Chargeable	Regular	NDE/L2/C/A-/00
0.5	Hr(s)	Consumables	LPI/MPI Consumables	N/A	NDE/CON/LMC/NA/00

Sign Here: _____
John Koncar CGSB Lev. IIREG# 1566, SNT Lev. II

Sign Here: _____
Customer Representative:

IMPORTANT: Please Sign And Return the Yellow Copy to Western Inspection Ltd. A.S.A.P. This Report Supersedes All Previous Copies.(rev 2) 6/24/2009 11:46:45 AM

This Report and all associated materials remain the sole property of Western Inspection Ltd. until such time as they are paid for in full.

INTEGRATED METALLURGICAL SERVICES LTD.
5110A - 77 Avenue S.E., Calgary, Alberta T2C 2Z2
Phone (403) 279-2666 Fax: (403) 236-3677 e-mail: cpryde@nucleus.com or dolsen@nucleus.com

HEAT TREATING REQUIREMENTS

CUSTOMER : PANEL Industries Canada Division **P.O. #:** 4312

MATERIAL : SA 333 GR6, SA 105 N

DESCRIPTION:

Three(3) pieces 6" S/160 meter Run

Ident #: 27815-2 CUST: HUSKY ENERGY
DWG. #: 7027815-2 REV.2
Three(3) pieces 4" S/160 meter Run.

Ident #: 27282-3.
DWG. #: 7027282-3 REV.3
CUST: BP CANADA

JOB NO: 27815-2 / 27282-3 **LENGTH:** 30 1/4", 48 3/4" & 67" / 19", 32 5/8" & 32"

WEIGHT: 300# 500# **DIA.:**

WALL THK: 0.719" 0.531"

PROCEDURE

1. Furnace Temperature shall not exceed: 425 °C on loading.
2. Heat Rate: 150 °C per hour.
3. Holding Temperature: 621 ±10 or ±~~14~~ or +10\-0 °C
4. Holding Time: 60 Minutes Minimum
5. Cooling Rate: 150 °C/Hr. Max. to 425 °C

Issued to FURNACE # 1 **FURNACE HEAT NUMBER:** 1-09-084

DATE: June 2, 2009 **ISSUED BY:** C. PRYDE

DANIEL

Daniel Measurement and Cont
Daniel Industries Canada Inc.
4215 - 72 Avenue S.E.
P.O. Box 727, Station "T"
Calgary, Alberta Canada T2H 2H
Telephone: (403)279-1879
Facsimile: (430)236-1337

HEAT TREATMENT REQUIREMENTS

DATE June 2/09

WORK ORDER 27815-2

P.O.# 4312 CUSTOMER: Husky Energy

DRAWING # 7027815-2 REV.# 02

DIAMETER: 6" LENGTH 30¾+48¾+67 WEIGHT 800 lb PIECES 3

PIPE THICKNESS .719 MATERIAL A333 / A105

TYPE OF HEAT TREATMENT stress

INSTRUCTIONS:

1. Temperature to be raised from 800° F to 1100-1200° F at a maximum rate of 400° F per hour. Note: Must not exceed 400° F per hour.
2. Temperature to be held at 1100-1200° for 60 minutes.
3. Temperature to be lowered from 1100-1200° F to 800° F at a rate of per hour. NOTE: Must not exceed a drop of 500° F per hour.
4. Additional Requirements:

SIGNATURE:

7-09-084 — FURNACE HEAT #

OPERATORS SIGNATURE

June 2, 2009 — DATE

AADCONTROLS LTD.
518 - 10 AVENUE N. E.
CALGARY ALBERTA T2E 0X6 TEL.(403) 277- 5392

CERTIFICATE OF CALIBRATION

DATE: MAR 6 2009 DUE DATE: JUNE 6 2009
COMPANY NAME: INTEGRATED METAL. LOCATION OF WORK: CALGARY
LOOP NAME: FURNACE #1 TYPE OF INSTRUMENT: RECORDER
MANUFACTURER OF INSTRUMENT: HONEYWELL
MODEL NO.: Y/S305836-06-01-2-000-002-(10)
SERIAL NO.: 04697247001
INSTRUMENT RANGE: 0-1200 °C INPUT TYPE: K
SERVICE REPORT NO.: —
CALIBRATION DEVICE USED: FLUKE: MODEL 725, SER. 7624251
TRACEABLE TO NATIONAL STANDARDS: NIST, NRC

NOTES:

SIGNED FOR AADCONTROLS LTD.:
SIGNED FOR CUSTOMER:

INPUT VALUE	AS FOUND	ERROR	AS LEFT	ERROR AFTER CALIBRATION
50 °C	48 °C	-2 °C	50 °C	0
300 °C	298 °C	-2 °C	300 °C	0
600 °C	598 °C	-2 °C	600 °C	0
900 °C	898 °C	-2 °C	900 °C	0
1150 °C	1152 °C	+2 °C	1154 °C	+4 °C

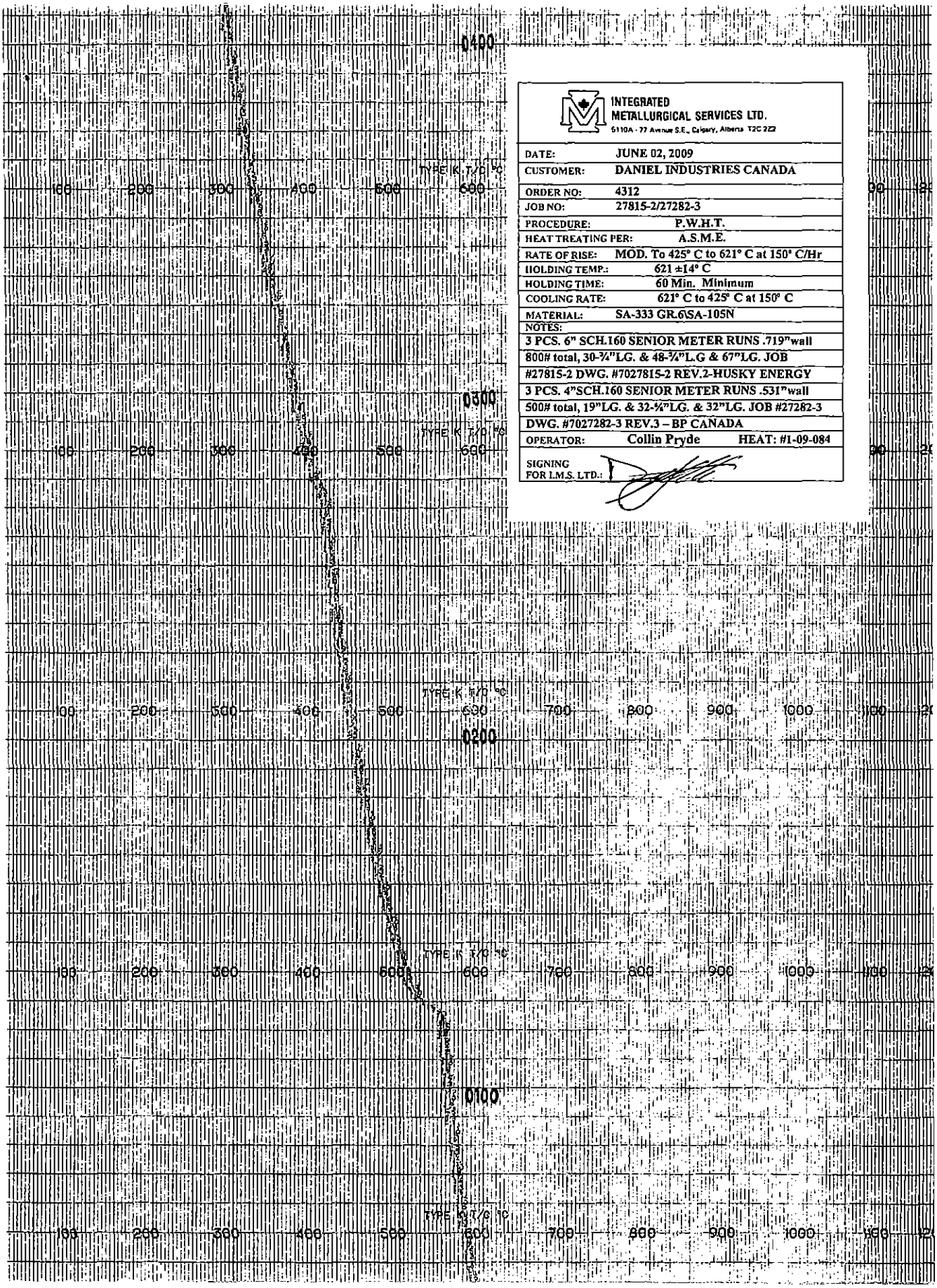

INTEGRATED METALLURGICAL SERVICES LTD.
5110A - 77 Avenue S.E., Calgary, Alberta T2C 2Z2

DATE:	JUNE 02, 2009
CUSTOMER:	DANIEL INDUSTRIES CANADA
ORDER NO:	4312
JOB NO:	27815-2/27282-3
PROCEDURE:	P.W.H.T.
HEAT TREATING PER:	A.S.M.E.
RATE OF RISE:	MOD. To 425° C to 621° C at 150° C/Hr
HOLDING TEMP.:	621 ±14° C
HOLDING TIME:	60 Min. Minimum
COOLING RATE:	621° C to 425° C at 150° C
MATERIAL:	SA-333 GR.6\SA-105N

NOTES:

3 PCS. 6" SCH.160 SENIOR METER RUNS .719"wall
800# total, 30-¾"LG. & 48-¾"L.G & 67"LG. JOB
#27815-2 DWG. #7027815-2 REV.2-HUSKY ENERGY
3 PCS. 4"SCH.160 SENIOR METER RUNS .531"wall
500# total, 19"LG. & 32-¾"LG. & 32"LG. JOB #27282-3
DWG. #7027282-3 REV.3 – BP CANADA

OPERATOR: Collin Pryde HEAT: #1-09-084

SIGNING FOR I.M.S. LTD.:

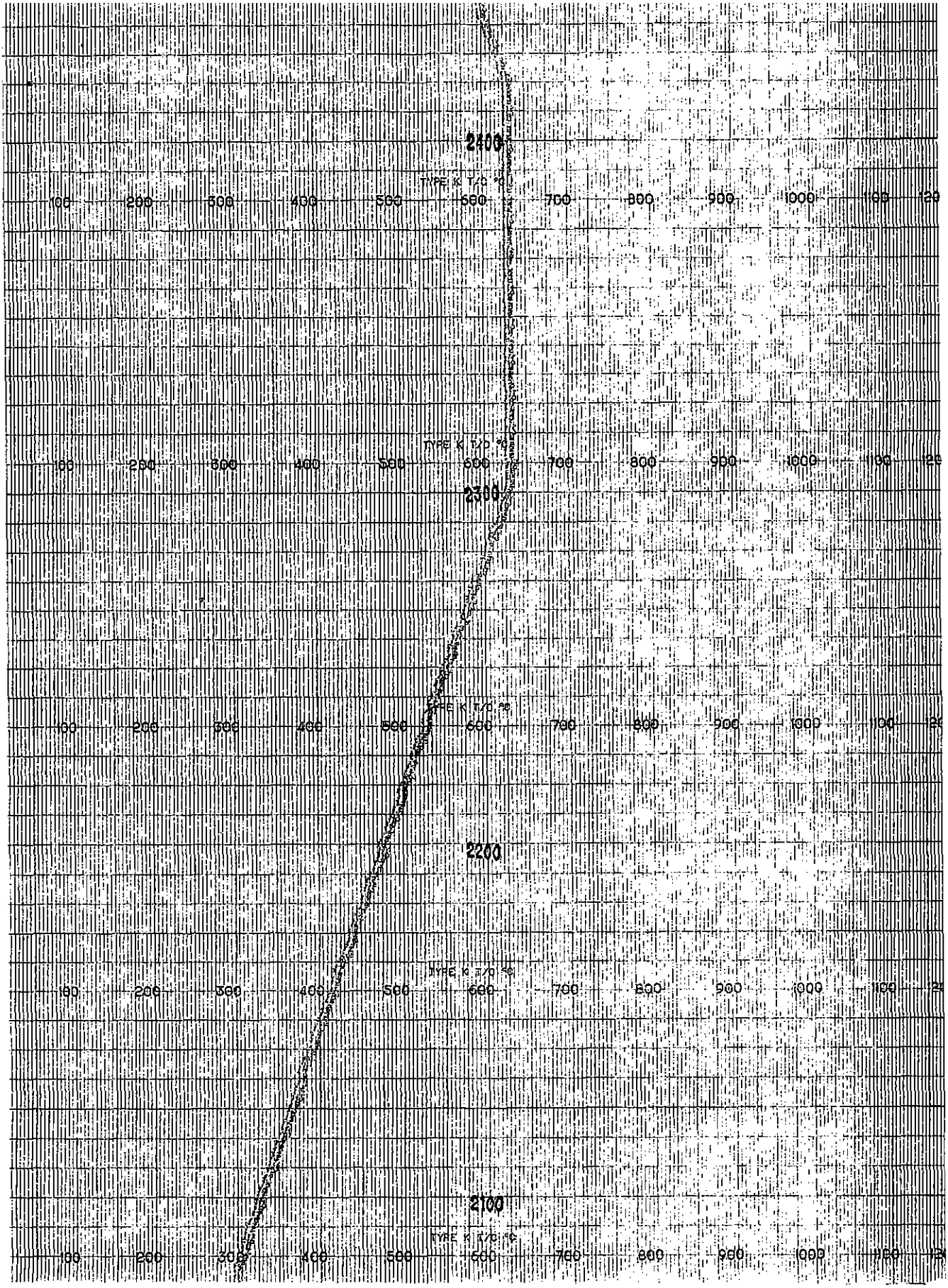
2400
TYPE K T/C °C
100
200
300
400
500
600
700
800
900
1000
2300
2200
2100

EMERSON
Process Management

Daniel Industries Canada Inc.
P.O. Box 727, Stn T (T2H 2H2)
4215 – 72 Avenue S.E.
Calgary, Alberta T2C 2G5
Canada
T 403-279-1879
F 403-236-1337

Date: June 4/09

Affidavit of Hydrostatic Test

Customer: Husky Energy

Daniel Work Order # 27815-2

Daniel Industries Canada hereby certifies that these goods were hydrostatically tested and meet the Leak Test requirements of:
ASME B31.3 (✓) ASME B31.1 ( )

Senior (✓) Simplex ( ) OFU ( ) Spools ( ) Air Test (✓) Chart (✓)

Size /ANSI: 6" 900#

Pressure: 3350 PSIG (✓) KPAG ( )

Hour(s): 1( ), 2( ), 4(✓), other (____)Hours

Serial #: 09110189	Serial #:
Serial #:	Serial #:
Serial #:	Serial #:
Serial #:	Serial #:
Serial #:	Serial #:
Serial #:	Serial #:

Verified By

Sign _____

Print EJ Becker

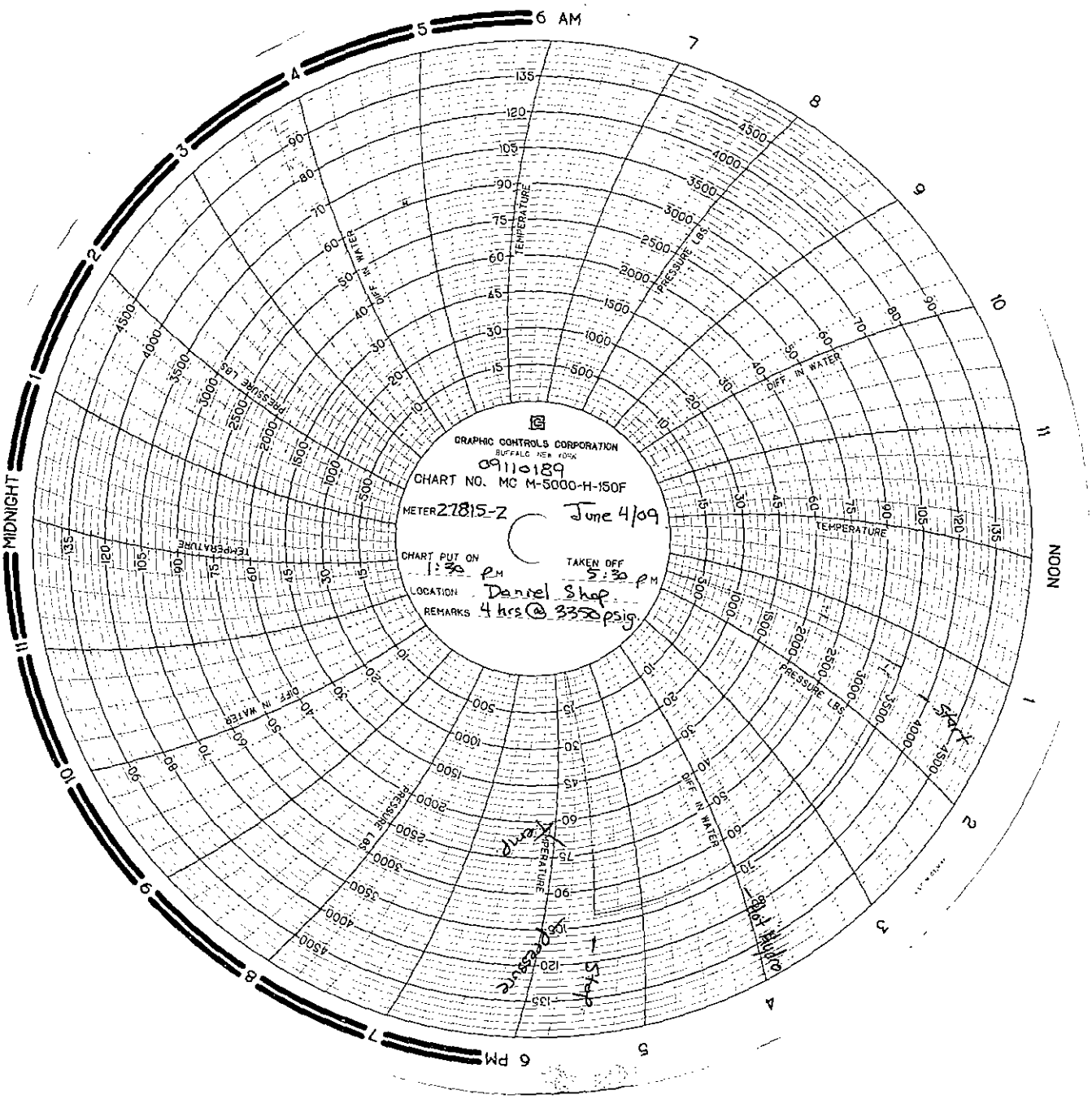
GRAPHIC CONTROLS CORPORATION
BUFFALO NEW YORK
09110189
CHART NO. MC M-5000-H-150F
METER 27815-Z
June 4/09
CHART PUT ON 1:30 PM
TAKEN OFF 5:30 PM
LOCATION Daniel Shop
REMARKS 4 hrs @ 3350 psig
6 AM
NOON
6 PM
MIDNIGHT
TEMPERATURE
PRESSURE LBS
DIFF. IN WATER
Start
Stop
Temp
Pressure
Dot Bulb

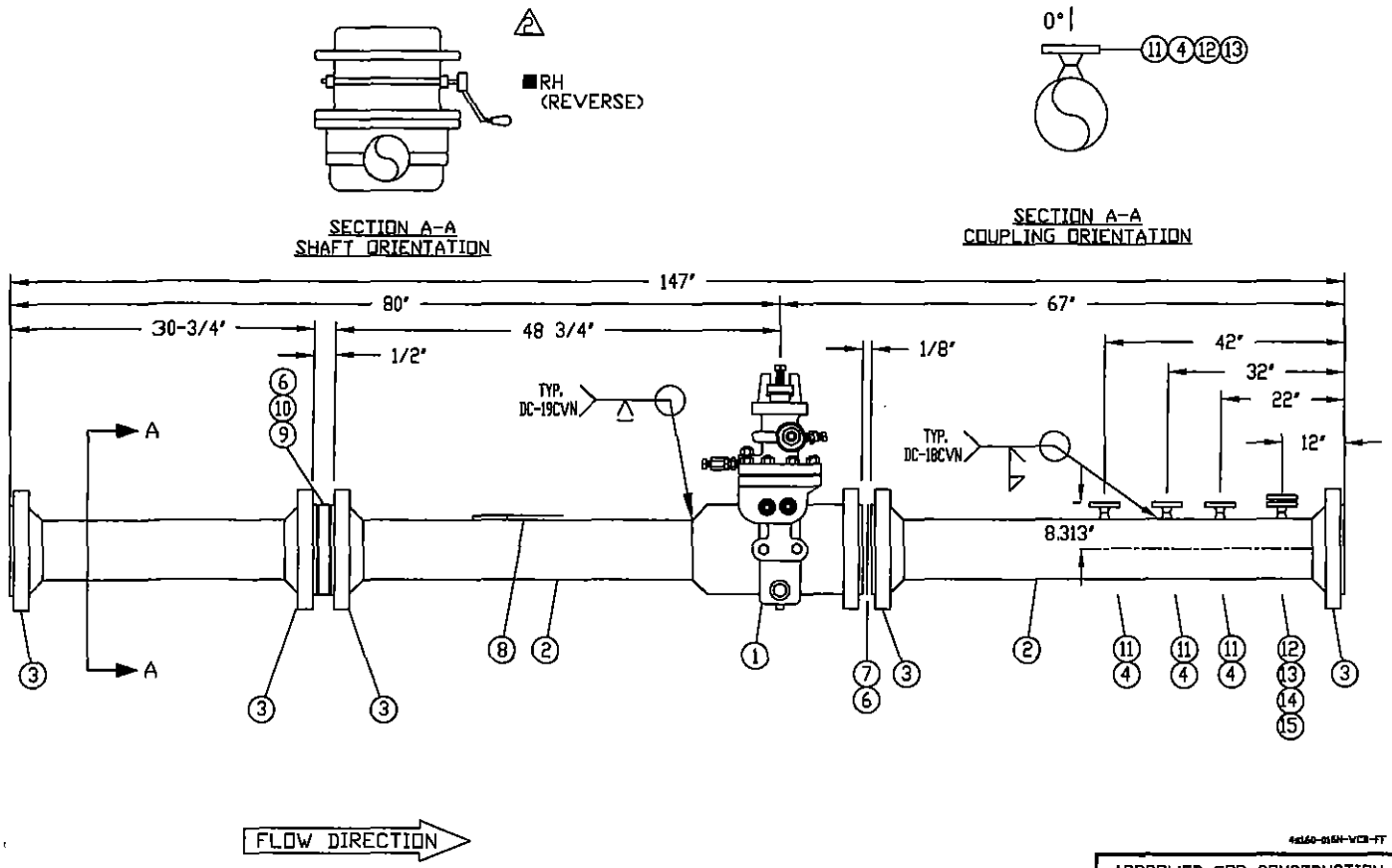

BILL OF MATERIAL (ONE RUN ONLY)

ITEM	QTY	DESCRIPTION
1	1	6" s/160 900# RF, MODEL 016C , NACE TRIM
-	-	LCC, SENIOR FITTING
2	3	6" s/160, A333 GR.6 COLD DRAWN SMLS PIPE
3	5	6" s/160 900# RFWN A105N FLANGES
4	3	1 1/2" 900# S/160 RFWN A105N RFWN
6	3	6" 900# 316SS FLEX GASKET (CGI) GRAPH FILLER
7	1SET	(12) 1-1/8"X7-3/4" B7M STUD W/(24)1-1/8"2HM NUTS
8	1	DANIEL NAMEPLATE W/ METER RUN S.N. & TAGGING
-	-	SA-36 OR EQUAL (CS BRACKET, SS NAMEPLATE)
9	1	6" S/160 CPA 50E FLG, FLOW CONDITIONER, 316SS
10	1SET	CP (12)1-1/8X8-1/4" B7M STUD W/(24)1-1/8"2HM NUT
11	3	6" X 1 1/2" S/160 WOL A105N
12	1	6" X 1" S/160 WOL A105N
13	1	1" 900# S/160 RFWN A105N RFWN w/ BLIND
14	1SET	CP (4) 1X5-3/4" B7M STUD W/(8) 1"2HM NUTS
15	1	1" 900# 316SS FLEX GASKET(CGI) GRAPH FILLER
		SP-6 SAND BLAST AND 3 MIL EPOXY PRIMER

NDT REQUIREMENTS

RADIOGRAPHY:	100% ALL WELDS, B31.3N ASNTII
HYDROTEST:	4 HOUR @ 3350 PSI, W/CHART
STRESS RELIEF:	YES
HARDNESS TEST:	YES
MAGNETIC PARTICLE:	NO
LIQUID DYE PENETRANT:	NO

INSPECTION	YES	NO
STANDARD 14.3 Verification		X
FULL 14.3 VERIFICATION (RUN & ORIFICE PLATE)	X	
SELECT CHEMISTRY: FOR SA333 GR 6 PIPE	X	
MAX CARBON CONTENT : 0.23%		
CE= C + MN/6 + (Cr + Mo+V)/5 + (Ni+Cu)/15 <= 0.43		

NOTES & TAGGING

1) MANUFACTURED, INSPECTED, TESTED IN ACCORDANCE WITH ASME B31.3
2) DIMENSIONS AS PER CPA RECOMENDATIONS.
3) AGA 3/API 14.3, Part 2, 4th Edition, 2000
4) TAG: FE-200
5) 6" CAT 500 ORIFICE PLATE 316SS BEVEL BORE 2.375"
6) SELECT CHEMISTRY APPLIES FOR SA-333 GR 6 PIPE

REV 2 TO CHANGE HANDLE ORIENTATION TO RIGHT-HAND ORIENTATION

SPECIFICATIONS

QUANTITY:	1		
LINE SIZE:	6"	SCH:	160
RATING:	900# / DMT = -20 DEG F		
MODEL:	016C , WCB		
TYPE:	FLANGNEK SENIOR		
TRIM:	NACE		
AGA FIG:	CPA 50E	BETA:	0.75
CRN:	0F0939.21	0F0634.21	

APPROVED FOR CONSTRUCTION:
M. Parekh May 22 2009

REV			
4			
3			
2		09/05/22	MRP
1			
REV	yy/mm/dd		INI

DANIEL INDUSTRIES CANADA
PHONE: (403) 279-1879
FAX: (403) 236-1307

THIS DRAWING IS THE PROPERTY OF DANIEL CANADA, AND MUST NOT BE USED EXCEPT IN CONNECTION WITH OUR WORK. IT SHALL NOT BE REPRODUCED, AND SHALL BE RETURNED TO US ON DEMAND.

HUSKY OIL OPERATIONS C/O GAS LIQUIDS ENG LTD
6" 900# S/160 RFWN SENIOR METER RUN -NACE

P.O.#: 8400030069		DATE: 09-04-27
END USER: HUSKY OIL OPERATIONS LTD	LOCATION: LSD: B-49-C/93-P-2	
DRAWN BY: AD/MP	DWG#: DC-W-09-7027815-2	REV: 02

UNITED STATES STEEL

TUBULAR PRODUCTS
CERTIFIED TEST REPORT
(IN ACCORDANCE WITH ISO 10474/EN10204/DIN50049 "type 3.1")

DATE: 05/18/07
TIME: 05:02:35
SERIAL NO: F0042705

MILL ORDER/ITEM NO	SHIPPERS NO.	P.O. NUMBER	VEHICLE I.D	
DR39211 01	P35082	80160-00	CR604789	INVOICE NO 0446187

SOLD TO ADDRESS	MAIL TO ADDRESS	VENDOR
TEXAS PIPE & SUPPLY CO INC 2330 HOLMES RD HOUSTON TX 77051-1098	TEXAS PIPE & SUPPLY CO INC 2330 HOLMES RD HOUSTON TX 77051-1098	USS TUBULAR PRODUCTS USS FAIRFIELD WORKS P.O. BOX 599 FAIRFIELD ALABAMA 35064

SPECIFICATION AND GRADE

PRESSURE PIPE CARBON SMLS HF ASTM A333-*05 GRADE 1 ASTM A333-*05 GRADE 6 ASME SA333-*2004 EDITION GRADE 1 ASME SA333-*2004 EDITION GRADE 6 ASTM A106-*06A GRADE B ASME SA106-*2004 EDITION GRADE B DUAL STENCIL BLK REG MILL COAT PE BEV 30 DEG MEETING ALL THE APPLICABLE REQUIREMENTS OF NACE STANDARD MR-01-75 *2002

WO# 25769 6" S/160 A333 (GR6) HONED
① PCE PIPE 22'6" HT: C45591

MATERIAL COND: QUENCH & TEMPER

O.D.: 6.625(168.275) in (mm)

WALL: 0.864 (21.945) in (mm)

PRODUCT IDENTIFICATION	TEST TYPE/ ORIENTATION	TEST COND.	GAUGE WIDTH IN	YIELD PSI	EXT % .50	TENSILE PSI	Y/T	ELONG % (IN 2 ')	HARDNESS SCALE: HRB	MIN HYDRO PSI	DWELL(SEC)
				MIN: 35,000 MAX:		MIN: 60,000 MAX:	MAX:	MIN: 30.0	MIN: MAX: 99.5	2800	5
C45591 *NOTE A	STRIP/L/B	HT	1.5	56,500	.50	71,000	0.79	57.9	83.8	2800	5
U40956 *NOTE B	STRIP/L/B	HT	1.5	56,000	.50	73,500	0.76	59.4	87.3	2800	5

LEGEND: L - LONGITUDINAL, U - UPSET, T - TRANSVERSE, NM - NORMALIZED, QT - QUENCH & TEMPERED, SR - STRESS RELIEVED, AR - AS ROLLED, B - BODY, W - WELD

PRODUCT IDENTIFICATION	TYPE	C	MN	P	S	SI	CU	NI	CR	MO	AL	N	V	B	TI	CB	CO				C.E.*
C45591	HEAT	16	115	009	008	21	02	01	05	14	032	005	02								
C45591	PROD	15	110	008	007	20	02	01	03	13	030	008	03								
C45591	PROD	18	114	007	003	20	03	01	03	14	029	009	03								
U40956	HEAT	16	112	008	007	22	02	01	03	13	030	008	03								
U40956	PROD	16	113	006	007	23	02	01	03	13	030	009	02								
U40956	PROD	16	112	006	007	24	02	01	03	13	030	009	03								

** END OF DATA THIS SHEET **

CE @ 0.395 mp

*C.E. IS BASED ON THE FOLLOWING EQUATION(S):

DECIMAL POSITIONS FOR ELEMENTS ARE INDICATED BY THE LEFT MARGIN, VERTICAL DOTTED LINE OR DECIMAL POINT.

UNITED STATES STEEL

TUBULAR PRODUCTS

CERTIFIED TEST REPORT

(IN ACCORDANCE WITH ISO 10474/EN10204/DIN50049 "type 3.1")

DATE: 05/18/07
TIME: 05:02:35
SERIAL NO: F0042705

MILL ORDER/ITEM NO	SHIPPERS NO.	P.O. NUMBER	
DR39211 01	P35082	80160-00	INVOICE NO 0446187

MATERIAL COND: QUENCH & TEMPER

O.D.: 6.625(168.275) in (mm)

WALL: 0.864 (21.945) in (mm)

PRODUCT IDENTIFICATION	FLAT	BEND	GRAIN SIZE	MIN COLLAPSE	CHARPY V-NOTCH IMPACT TESTING DIR	TEST LOC.	TEMP	SIZE	TEST COND.	FT-LBS 1	FT-LBS 2	FT-LBS 3	FT-LBS AVG	% SHEAR 1	% SHEAR 2	% SHEAR 3	% SHEAR AVG
							DEG F			10	10	10	13				
C45591	OK				L	B	- 50	FULL	HT	264	264	264	264				
C45591	OK				L	B	- 50	FULL	HT	110	88	84	94				
U40956	OK				L	B	- 50	FULL	HT	264	264	264	264				
U40956	OK				L	B	- 50	FULL	HT	80	103	78	87				
			** END OF DATA THIS SHEET **														

LEGEND L - LONGITUDINAL T - TRANSVERSE B - BODY W - WELD HAZ - HEAT AFFECTED ZONE

TESTING / INSPECTION INFORMATION

TEST / INSPECTION	YES	RESULTS / COMMENTS
FULL LENGTH VISUAL	X	
FULL LENGTH EMI	X	OD X OD/ID ____ L ____ L/T X 10.0% NOTCH
FULL LENGTH MPI		
FULL LENGTH UT	X	ID ____ OD/ID X L ____ L/T X 10.0/10.0% NOTCH
END AREA INSPECTION (PLAIN END)	X	MPI X UT ____
SPECIAL END AREA (SEA) INSP		MPI ____ UT ____
FULL LENGTH DRIFT		DRIFT MANDREL SIZE:

ADDITIONAL NOTES/COMMENTS

ALL MELTING AND MANUFACTURING TOOK PLACE IN THE USA.
MANUFACTURED IN AN ISO 9001 CERTIFIED FACILITY - CERTIFICATE #30727.
NO REPAIRS BY WELDING. NO MERCURY OR MERCURY COMPOUNDS ARE ADDED TO THE STEEL AND ALL MERCURY BEARING EQUIPMENT IS PROTECTED BY A DOUBLE BOUNDARY OF CONTAINMENT.
01 MILL
*NOTE A SEE ATTACHED REPORT FOR TENSILE RESULTS. *NOTE B SEE ATTACHED REPORT FOR TENSILE RESULTS.

** END OF DATA **

THIS IS TO CERTIFY THAT THE PRODUCT DESCRIBED HEREIN WAS MANUFACTURED, SAMPLED, TESTED AND/OR INSPECTED IN ACCORDANCE WITH THE SPECIFICATION AND FULFILLS THE REQUIREMENTS IN SUCH RESPECTS.

PREPARED BY THE OFFICE OF: J.T. CLAYTON - MANAGER, Q.A.

DATE 05/18/07

MATERIAL CERTIFICATION

TO

Daniel Ind. M&C - Mechanical
5650 Brittmoore Road
Houston, TX 77041

CASTING DATA

Heat No	Qty	Part No.	P.O. No.
M852	4	016-6C	209274-000

SPECIFICATION

Daniel PMA-A352-06 Rev. A.

ASTM A352 Grade LCC Modified with Supplementary Requirement S21. Complies: NACE MR-01-75, latest revision. Quality Electric Steel Castings, L.P. declares that the products supplied are in compliance with the requirements of the order and EN 10204:2004 Type 3.1.

CHEMICAL DATA

C	Mn	Si	P	S	Cr	Ni	Mo	V	Cu	W	Al	N
.18	.90	.53	.015	.009	.32	.11	.06	.007	.12	.006	.033	.01

TENSILE DATA

Tensile		Yield		% El-2"	% Red Area	HBW
86,830	PSI	64,230	PSI	28	67.2	174

CHARPY DATA

Temp -50 °F °C %Shear=40-40-50; Mils Lateral Exp=32-34-37
42-46-59 Ft-Lb

HEAT TREAT

			Hrs At Heat	Coolant
Normalize	1650	°F	5	Air
Quench	1650	°F	5	Water
Temper	1150	°F	5	Air
Temper		°F		
		°F		

COMMENTS

Quality System Certification by Lloyd's Register Quality Assurance ISO 9001-2000. Certificate Number 112921. May 31, 2011.

ELECTRIC STEEL CASTINGS, INC.
OFFICE & FOUNDRY: 252 McCARTY DRIVE • HOUSTON, TEXAS 77029
713 • 672-6625 • FAX 713 • 672-4840

By C. B. Bergin Lab Supervisor

Date 1/28/2009

Lab Fs (Rev 4/01)

FROM	
	Keokuk Steel Castings Co. A Matrix Metals LLC Company 3972 Main St. Road / P.O. Box 6005 Keokuk, IA 52632 Phone: (319) 526-8294 FAX: (319) 524-5058

Certified Material Test Report

TO	
	DANIEL MEASUREMENTS & CON ATTN: PATSY FRANCO 5650 BRITTMORE ROAD HOUSTON, TX 77041 U.S.A.

Casting Data	Heat Code	T059	Quantity	1	Purchase Order	210748-000-1	Master Heat #	77761	Alloy	1017	Date Poured	1/15/2009
	Part #	600-900-6T	Desc	TOP	Spec	ASTM A352-93 LCC and PMA-A352-06 Quench and Temper						

Chem. Data		C	Mn	Si	Ni	Cr	Mo	Al	Zr	P	S	Fe	Cu	V	B	W	Cb	Se	Co	Ti	N
	Heat	0.145	0.84	0.37	0.29	0.15	0.15	0.023		0.017	0.011	97.80	0.127	0.018	0.000	0.01	0.00		0.00	0.00	0.0132
	Check																				

Tensile Data	Tensile - PSI	Tensile - mPa	Yield - PSI	Yield - mPa	% Elongation	% Red. of Area	Brinell - 1	Brinell - 2	Original Gage Length
	87000	600	66500	460	26	65	187	187	2.00

Charpy V-Notch Data	Test Temp.		Impact Toughness (foot-pounds)				Impact Toughness (Joules)				Lateral Expansion (mils)				Percent Shear			Brinell Hardness		
	°F	°C	#1	#2	#3	Average	#1	#2	#3	Average	#1	#2	#3	Average	#1	#2	#3	#1	#2	#3
	-50	-46	41.0	41.0	45.0	42.3	55.6	55.6	61.0	57.4								187	187	

Calc. Data	% Ferrite	Carbon Equivalent	Ideal Diameter	CAT Ideal Diameter
		0.375		

Notes	
	The above specimen meets the minimum requirements of the specification requested on above referenced P.O. and MSS-SP-55 (YIELD is 0.2% Offset) This material certification complies with Specification EN 10204: 2004(E) 3.1,in that it is prepared by the work's inspector from tests carried out by a testing department whose manager is administratively independent of the production manager.

	3/13/2009
Robert Hollandsworth - Plant Metallurgist - Keokuk Steel Castings Co.	Date

Form #	Office Use Only
001	

METALFAR

PRODOTTI INDUSTRIALI S.P.A.
23861 CESANA BRIANZA (LC) ITALY
Tel. 031.655441 - Fax 031.655149
MATERIAL TEST DEPARTMENT
SALA PROVE ED ANALISI MATERIALI

COMPANY WITH QUALITY MANAGEMENT SYSTEM CERTIFIED BY DNV = ISO 9001 : 2000 =

INSPECTION CERTIFICATE EN 10204/3.1 — *CERTIFICATO DI COLLAUDO*

TRANS AM PIPING PRODUCTS LTD
9335 RENKAVOR DRIVE S.E.
CALGARY-ALBERTA T3S 0 A1

N.: 688/ 22/02/2008
INVOICE / FATTURA: 510/ 20/02/2008
S.: 53170
DEL. NOTE / BOLLA: 938/ 20/02/2008

PAG.: 1

6" CL 600 W/N FLANGE RF XH
BORE A105N

HEAT NUMBER : 683494
TRANS AM PIPING PRODUCTS - REV'D BY: 3
Shipment/Seq #: S 8 - 1061

T CODE COLATA	HEAT COLATA	ITEM POS.	YOUR P.O. VS. ORDINE	OUR REFERENCE NS. ORDINE	QUANTITY QUANTITÀ	DESCRIPTION DESCRIZIONE		DIM. ACCORDANCE TO DIM. IN ACCORDO A	VISUAL & DIMENSIONAL VISIVO E DIMENSIONALE
	38952	0098	CI08-124	08000298 0105		S/O 300 RF 8"	A105	ASME/ANSI B16.5	SATISFACTORY
	683494	0044	CI08-124	08000298 0052		W/N 600 RF 6" XS	A105	ASME/ANSI B16.5	SATISFACTORY
	683494	0044	CI08-124	08000298 0052		W/N 600 RF 6" XS	A105	ASME/ANSI B16.5	SATISFACTORY
	683494	0044	CI08-124	08000298 0052		W/N 600 RF 6" XS	A105	ASME/ANSI B16.5	SATISFACTORY
	683494	0044	CI08-124	08000298 0052		W/N 600 RF 6" XS	A105	ASME/ANSI B16.5	SATISFACTORY
	683494	0044	CI08-124	08000298 0052		W/N 600 RF 6" XS	A105	ASME/ANSI B16.5	SATISFACTORY

T CODE COLATA	HEAT COLATA	ITEM POS.	MATERIAL MATERIALE	C %	Si %	Mn %	S %	P %	Cr %	Ni %	Mo %	Ti %	Cu %	V %	Nb %	N %	Al %	C.E. %	ORIGIN ORIGINE
	38952	0098	ASTM A 105	0.195	0.240	1.040	0.017	0.014	0.130	0.060	0.010	0.009	0.130	0.004	0.002	0.000	0.010	0.409	EUROPE
	683494	0044	ASTM A 105	0.200	0.235	1.130	0.013	0.011	0.083	0.025	0.007	0.002	0.050	0.001	0.001	0.000	0.031	0.411	EUROPE
	683494	0044	ASTM A 105	0.200	0.235	1.130	0.013	0.011	0.083	0.025	0.007	0.002	0.050	0.001	0.001	0.000	0.031	0.411	EUROPE
	683494	0044	ASTM A 105	0.200	0.235	1.130	0.013	0.011	0.083	0.025	0.007	0.002	0.050	0.001	0.001	0.000	0.031	0.411	EUROPE
	683494	0044	ASTM A 105	0.200	0.235	1.130	0.013	0.011	0.083	0.025	0.007	0.002	0.050	0.001	0.001	0.000	0.031	0.411	EUROPE
	683494	0044	ASTM A 105	0.200	0.235	1.130	0.013	0.011	0.083	0.025	0.007	0.002	0.050	0.001	0.001	0.000	0.031	0.411	EUROPE

T CODE COLATA	HEAT COLATA	ITEM POS.	TEST SPECIMEN mm² PROVETTA SECTION Sezione	TEST SPECIMEN mm LENGHT Lunghezza	YIELD POINT Snervamento N/mm² ≥ 0,2 %	TENSILE STRENGHT Rottura N/mm² ≥	ELONGATION Allungamento % ≥	REDUCTION OF AREA Contrazione % ≥	HARDNESS Durezza Hb	BEND TEST Piega	FLATTENING TEST Schiacciam.	IMPACT TEST - Resilienza Joule / cm² U.M.	TYPE TIPO 10x10 mm	°C	1	2	3	SHAPE FORMA 1=Ø 2=□	Ø	W	X	YIELD POINT SNERVAMENTO N/mm² ≥ 1,0 %	OUR
	38952	0098	126.60	50.80	353.0	531	31.0	58.0	163-165	0.0	0.0		KV	20	83	88	85	1				0.0	
	683494	0044	126.60	50.80	326.0	534	31.0	59.0	163-165	0.0	0.0		KV	20	86	88	88	1				0.0	
	683494	0044	126.60	50.80	326.0	534	31.0	59.0	163-165	0.0	0.0		KV	20	86	88	88	1				0.0	
	683494	0044	126.60	50.80	326.0	534	31.0	59.0	163-165	0.0	0.0		KV	20	86	88	88	1				0.0	
	683494	0044	126.60	50.80	326.0	534	31.0	59.0	163-165	0.0	0.0		KV	20	86	88	88	1				0.0	
	683494	0044	126.60	50.80	326.0	534	31.0	59.0	163-165	0.0	0.0		KV	20	86	88	88	1				0.0	

T CODE COLATA	HEAT COLATA	ITEM POS.	MATERIAL IN ACCORDANCE TO MATERIALE IN ACCORDO A	HEAT TREATMENT TRATTAMENTO TERMICO
	38952	0098	ASTM/ASME A 105/SA 105 M - 05	NORMALIZED AT 920 C - COOLED IN STILL AIR ELECTRIC FURNACE
	683494	0044	ASTM/ASME A 105/SA 105 M - 05	NORMALIZED AT 920 C - COOLED IN STILL AIR ELECTRIC FURNACE
	683494	0044	ASTM/ASME A 105/SA 105 M - 05	NORMALIZED AT 920 C - COOLED IN STILL AIR ELECTRIC FURNACE
	683494	0044	ASTM/ASME A 105/SA 105 M - 05	NORMALIZED AT 920 C - COOLED IN STILL AIR ELECTRIC FURNACE
	683494	0044	ASTM/ASME A 105/SA 105 M - 05	NORMALIZED AT 920 C - COOLED IN STILL AIR ELECTRIC FURNACE
	683494	0044	ASTM/ASME A 105/SA 105 M - 05	NORMALIZED AT 920 C - COOLED IN STILL AIR ELECTRIC FURNACE

E
ATERIAL IN ACCORDANCE WITH NACE MR-0175/2003

QUALITY CONTROL DEPARTMENT UFFICIO CONTROLLO QUALITÀ	INSPECTION AUTHORITY ENTE UFFICIALE COLLAUDO	MANUFACTURER'S SYMBOL MARCHIO PRODUZIONE
BRACCHI FLAVIO		MFF

1" CL 900/1500 RTJ W/N FLANGE
XXH BORE A105N (SQ. CUT)

HEAT NUMBER : 13144
TRANS AM PIPING PRODUCTS - REV'D BY:
Shipment/Seq #: S 8 - 1649 6

SAN ENG STEEL FORGING CO LTD
311, Jen Hsin Road, Jen Wu Hsiang
Kaohsiung Hsien, Taiwan, R.O.C.
TEL:07-3724249 ; FAX:07-3712923
URL. www.saneng.com.tw
e-mail: saneng@ksts.seed.net.tw

MILL TEST CERTIFICATE

EN10204-3.1.B(DIN50049/3.1.B)
Customer: SEYBOLD INTERNATIONAL CORP.
Order No.: 7975(12)-TRANS AM

Certificate No.: SE7975L1
Date: 12/08/2008

PRODUCT	MATERIAL SPECIFICATIONS	DIMENSIONAL SPECIFICATIONS
FORGED CARBON STEEL FLANGES	ASTM A105-05/ASME SA105-07	ASME B16.5-03 CSA Z245.12

Item No.	CUSTOMER P/N	DESCRIPTION	QUANTITY	CHEMICAL COMPOSITION (%) C	Si	Mn	P	S	Cu	Cr	Ni	Mo	V	Nb	N			CE(*3)
			Min	-	0.100	0.600	-	-	-	-	-	-	-	-	-			
			Max	0.350	0.350	1.050	0.035	0.040	0.400	0.300	0.400	0.120	0.080	0.020	-			
1		900/1500 WNRTJ XXS(SC) 1" A105N		0.200	0.200	1.160	0.007	0.011	0.060	0.040	0.030	0.005	0.003	0.005	0.010			0.408
2		150 BLRF 2" A105N		0.200	0.200	1.160	0.007	0.011	0.060	0.040	0.030	0.005	0.003	0.005	0.010			0.408

Item No.	Heat No.	T.S.(*1) (MPA)	Y.S.(*1) (MPA)	E.L.(*1) (%)	Hardness (HB)	R.A.(*1) (%)	Impact Test Temp: Minimum: Joule 1	2	3	Material Supplier
Min		485.0	250.0	22.0	-	30.0				
Max		-	-	-	187	-				
1	13144	519.8	311.9	33.2	150	65.9				OEMK
2	13144	519.8	311.9	33.2	150	65.9				OEMK

■ HEAT TREATMENT(*2)
☒ N

■ REMARKS
880°CX5HRS
CONFORMS WITH NACE MR01-75/03 AND MR01-03/07/ISO15156.2
CONFORMS WITH Z245.12 CAT I GR.248 SOUR SERVICE-05

*1: T.S. = Tensile Strength, Y.S.=Yield Strength, E.L.=Elongation, R.A.=Reduction of Area.

*2: N=Normalized, A=Annealed, Q=Quenched, T=Tempered, S.T=Solution Treated, S.R=Stress Relieved, A.C=Air Cooled, F.C=Furance Cooled, W.C=Water Cooled, O.C=Oil Cooled.

*3: C.E. Value = C + (Mn /6) + (Cr + Mo +V) / 5 + (Ni + Cu) / 15

We hereby certify that the material has been tested in accordance with the above specification and also with the requirements called for by the above order.

Manager of Quality Assurance Dep't

HEAT NUMBER : 10669
TRANS AM PIPING PRODUCTS - REV'D BY:
Shipment/Seq #: S 7 - 1599 14

1-1/2" CL 900/1500 W/N FLANGE RF
SCH 160 BORE A105N

MILL TEST CERTIFICATE

三英鋼鐵股份有限公司
SAN ENG STEEL FORGING CO., LTD.

NO. 22 LANE 50, WAN SING STREET
SAN MIN DISTRICT, KAOHSIUNG,
TAIWAN, R. O. C.
Tel: 07-372 4249 , 07-371 2934
Fax: 07-371 2923 07-371 2846
URL: http://www.saneng.com.tw
e-mail: saneng@ksts.seed.net.tw

EN10204-3.1.B(DIN50049/3.1.B)
CUSTOMER :SEYBOLD INTERNATIONAL CORP.

20 HOLLY STREET, SUITE 205
TORONTO, M4S 3B1,CANADA
TEL:416-4810191FAX:416-4811790

CERT NO.: SE-7123DN

DATE : 12/04/2007

ORDER NO.:7123(4)TRANS AM

L/C NO. :

PRODUCT	SPECIFICATION FOR MATERIAL	SPECIFICATION FOR FITTINGS
FORGED CARBON STEEL FLANGES	ASTM A-105/ASME SA-105-05 (Z245.12 CAT I GR.248 SOUR SERVICE-01)	ASME B16.5-03

ITEM NO.	DESCRIPTION	QUANTITY	CHEMICAL COMPOSITION (%) C	Si	Mn	P	S	Cu	Cr	Ni	Mo	V	Nb	N	C.E.
1.	150 WNRF STD 20" A105N		0.200	0.200	1.020	0.022	0.006	0.090	0.120	0.030	0.010	0.004	0.001	0.006	0.404
2.	150 WNRF XS 2" A105N		0.200	0.180	1.050	0.014	0.012	0.060	0.110	0.040	0.011	0.003	0.005	0.009	0.407
3.	150 WNRF S40 18" A105N		0.220	0.180	1.090	0.014	0.008	0.060	0.090	0.050	0.007	0.003	0.005	0.009	0.429
4.	900/1500 WNRF S160 1/2" A105N		0.200	0.220	0.980	0.009	0.007	0.060	0.060	0.030	0.005	0.003	0.005	0.007	0.383
5.	150 BLRF 8" A105N		0.220	0.230	1.080	0.013	0.011	0.060	0.040	0.030	0.010	0.003	0.005	0.009	0.417
6.	900/1500 BLRF 3/4" A105N		0.190	0.140	1.120	0.010	0.016	0.100	0.110	0.050	0.005	0.003	0.005	0.009	0.411
7.	900/1500 BLRF 1" A105N		0.210	0.170	1.080	0.009	0.015	0.080	0.090	0.040	0.005	0.003	0.005	0.009	0.418
8.	150 HUB BLRF 1 1/2" A105N		0.210	0.180	1.070	0.007	0.010	0.050	0.040	0.030	0.006	0.003	0.005	0.009	0.404
9.	150 SORF 16" A105N		0.190	0.200	1.010	0.022	0.005	0.110	0.100	0.040	0.010	0.005	0.001	0.000	0.391
10.	150 SORF 18" A105N		0.210	0.190	1.030	0.021	0.006	0.090	0.110	0.040	0.010	0.005	0.001	0.007	0.415

ITEM	HEAT	TENSILE STRENGTH (MPA)	YIELD STRENGTH (MPA)	ELONGATION (%)	HARDNESS (HB)	REDUCTION OF AREA (%)	HEAT TREATMENT	MATERIAL SUPPLIER	REMARKS
		485 MIN	250 MIN	22.0 MIN	187 MAX	30.0 MIN			NORMALIZATION: 880℃X3HRS CONFORMS TO MEET WITH NACE MR01-75/03 AND MR01-03/03
1.	01874	508.00	319.70	39.4	151	70.4	NORMALIZED	KOTOBUKI	
2.	21511	519.80	317.70	34.6	153	65.9	NORMALIZED	OEMK	
3.	49115	533.20	379.30	36.4	162	66.8	NORMALIZED	OEMK	
4.	10669	487.10	335.20	36.2	149	69.5	NORMALIZED	OEMK	
5.	28008	515.80	323.60	40.0	157	61.1	NORMALIZED	OEMK	
6.	29572	505.00	300.10	36.0	150	67.7	NORMALIZED	OEMK	
7.	49190	499.20	291.30	39.6	157	66.8	NORMALIZED	OEMK	
8.	31079	515.80	333.40	36.4	155	68.6	NORMALIZED	OEMK	
9.	01876	503.10	356.00	37.4	148	70.4	NORMALIZED	KOTOBUKI	
10.	01872	511.90	333.40	38.6	149	69.5	NORMALIZED	KOTOBUKI	

WE HEREBY CERTIFY THAT THE MATERIAL DESCRIBED HEREIN HAS BEEN MADE IN ACCORDANCE WITH THE ABOVE SPECIFICATION AND ALSO WITH THE REQUIREMENTS CALLED FOR BY THE ABOVE ORDER AND IS THAT WHICH HAS BEEN TESTED TO THE SATISFACTION OF THE CERTIFICATE.

MANAGER

TEST CHIEF

HEAT NUMBER : 34238
TRANS AM PIPING PRODUCTS - REV'D BY:
Shipment/Seq #: S 6 - 1057 31

1-1/2" CL 900/1500 BLIND FLANGE
RF A105N

MILL TEST CERTIFICATE

三英鋼鐵股份有限公司
SAN ENG STEEL FORGING CO., LTD.

NO. 22 LANE 50, WAN SING STREET
SAN MIN DISTRICT, KAOHSIUNG,
TAIWAN, R. O. C.
Tel: 07-372 4249 07-371 2934
Fax: 07-371 2923 07-371 2846
URL: http://www.saneng.com.tw
e-mail: saneng@ksts.seed.net.tw

EN10204-3.1.B(DIN50049/3.1.B)
CUSTOMER :SEYBOLD INTERNATIONAL CORP.

20 HOLLY STREET, SUITE 205
TORONTO, M4S 3B1,CANADA
TEL:416-4810191FAX:416-4811790

CERT NO.: SE-5204AN
DATE : 01/16/2006

ORDER NO.:5204(1)TRANS AM

L/C NO. :

PAGE :

PRODUCT	SPECIFICATION FOR MATERIAL	SPECIFICATION FOR FITTINGS
FORGED CARBON STEEL FLANGES	ASTM A-105-03/ASME SA-105 (Z245.12 CAT I GR.248 SOUR SERVICE-01)	ASME B16.5-98a

ITEM NO.	DESCRIPTION	QUANTITY	CHEMICAL COMPOSITION (%) C	Si	Mn	P	S	Cu	Cr	Ni	Mo	V	Nb	N	C.E.
1.	150 WNRF STD 16" A105N		0.200	0.250	0.920	0.017	0.015	0.220	0.120	0.170	0.030	0.000	0.005	0.011	0.410
2.	150 WNRF STD 18" A105N		0.200	0.250	0.920	0.017	0.015	0.220	0.120	0.170	0.030	0.000	0.005	0.011	0.410
3.	150 BLRF 3/4" A105N		0.200	0.200	1.080	0.013	0.006	0.050	0.110	0.040	0.005	0.003	0.005	0.007	0.410
4.	150 BLRF 8" A105N		0.200	0.200	1.080	0.013	0.006	0.050	0.110	0.040	0.005	0.003	0.005	0.007	0.410
5.	150 BLRF 10" A105N		0.210	0.210	1.040	0.019	0.010	0.010	0.030	0.020	0.000	0.002	0.001	0.000	0.392
6.	150 BLRF 24" A105N		0.200	0.240	0.910	0.019	0.017	0.200	0.150	0.150	0.020	0.000	0.002	0.007	0.409
7.	300 BLRF 2" A105N		0.210	0.180	1.030	0.010	0.007	0.090	0.080	0.060	0.005	0.003	0.005	0.010	0.410
8.	300 BLRF 10" A105N		0.200	0.180	0.990	0.009	0.004	0.050	0.050	0.020	0.005	0.003	0.005	0.009	0.382
9.	900/1500 BLRF 1" A105N		0.210	0.180	1.030	0.010	0.007	0.090	0.080	0.060	0.005	0.003	0.005	0.010	0.410
10.	900/1500 BLRF 1 1/2" A105N		0.210	0.180	1.000	0.014	0.012	0.100	0.070	0.040	0.005	0.002	0.005	0.006	0.402

ITEM	HEAT	TENSILE STRENGTH (MPA)	YIELD STRENGTH (MPA)	ELONGATION (%)	HARDNESS (HB)	REDUCTION OF AREA (%)	HEAT TREATMENT	MATERIAL SUPPLIER	REMARKS
		485 MIN	250 MIN	22.0 MIN	187 MAX	30.0 MIN			NORMALIZATION: 880℃X2HRS CONFORMS TO MEET NACE MR-01-75 LATEST EDITION
1.	58099	511.90	323.60	34.8	153	64.9	NORMALIZED	RED OCTOBER	
2.	58099	511.90	323.60	34.8	153	64.9	NORMALIZED	RED OCTOBER	
3.	97494	501.10	313.80	37.2	148	66.8	NORMALIZED	OEMK	
4.	97494	501.10	313.80	37.2	148	66.8	NORMALIZED	OEMK	
5.	261875	489.10	331.30	34.4	143	69.5	NORMALIZED	ACOMINAS	
6.	58110	505.00	306.00	34.2	154	68.6	NORMALIZED	RED OCTOBER	
7.	34949	509.90	306.00	39.0	148	65.9	NORMALIZED	OEMK	
8.	48134	511.60	309.70	35.8	162	64.9	NORMALIZED	OEMK	
9.	34949	509.90	306.00	39.0	148	65.9	NORMALIZED	OEMK	
10.	34238	507.70	321.50	33.0	166	63.0	NORMALIZED	OEMK	

WE HEREBY CERTIFY THAT THE MATERIAL DESCRIBED HEREIN HAS BEEN MADE IN ACCORDANCE WITH THE ABOVE SPECIFICATION AND ALSO WITH THE REQUIREMENTS CALLED FOR BY THE ABOVE ORDER AND IS THAT WHICH HAS BEEN TESTED TO THE SATISFACTION OF THE CERTIFICATE.

MANAGER TEST CHIEF

CERTIFIED MILL TEST REPORT

(2)

The Best Value
Price, Quality, Service
All The Time.

LOG NO. 331754 PAGE 2

BONNEY FORGE
P.O. BOX 330 • 14496 CROGHAN PIKE • MOUNT UNION, PA 17066-0330
(814) 542-2545 • (800) 345-7546 • FAX (814) 542-4906
www.bonneyforge.com

CUSTOMER:

Date 02/26/09

CUSTOMER'S Order No.: 4885821-00

Bonney Order No 00050587

SHIPPED TO

ITEM	QUANTITY	LOT NO.		GRADE OR SPECIFICATION NO. CHEMICAL ANALYSIS, PHYSICAL PROPERTIES, REMARKS:
				SA/A105N
005	4	57243	7550740	14-12X4 STD A105N WELD B
				C .200 MN 1.000 P .008 S .017 SI .220
				NI .030 CU .120 CO .003 CR .060 MO .010
				V .000 AL .020 NB .012
				CE(LONG FORMULA) = 0.39
				T/S 73500 Y/S 49500 EL 34.05 RA 68.50
				BRINELL HARDNESS1: 132 HARDNESS2: 132
		57339	7550740	14-12X4 STD A105N WELD B
				C .190 MN .990 P .012 S .021 SI .230
				NI .081 CU .210 CR .141 MO .024 V .025
				CB .011 AL .001
				CE(LONG FORMULA) = 0.41
				T/S 81000 Y/S 56625 EL 31.40 RA 66.10
				BRINELL HARDNESS1: 135 HARDNESS2: 132
007	2	57386	7559498	22 -20 X 6 XS A105N WELD B
				C .170 MN 1.050 P .010 S .023 SI .230
				NI .080 CU .180 CO .007 CR .120 MO .040
				V .039 CB .004 AL .026
				CE(LONG FORMULA) = 0.40
				T/S 75377 Y/S 54774 EL 33.50 RA 66.13
				BRINELL HARDNESS1: 127 HARDNESS2: 127
008	25	57444	7550069	10-3X1 S160 A105N WELD B
				C .210 MN 1.000 P .018 S .018 SI .210
				NI .040 CU .160 CO .003 CR .050 MO .020
				V .000 AL .025 NB .014
				CE(LONG FORMULA) = 0.40
				T/S 76000 Y/S 51500 EL 30.00 RA 63.00
				BRINELL HARDNESS1: 141 HARDNESS2: 139

***** CONTINUED ON NEXT PAGE *****

We certify that the data on this sheet is a true copy taken from our records of material furnished us by the production mill, or as obtained by additional laboratory checks.

by

Cris Boozel

CMTR: REV 1

QUALITY PROCESS MANAGER

CERTIFIED MILL TEST REPORT

The Best Value
Price, Quality, Service
All The Time.

LOG NO. 331754 PAGE 5

BONNEY FORGE
P.O. BOX 330 • 14496 CROGHAN PIKE • MOUNT UNION, PA 17066-03
(814) 542-2545 • (800) 345-7546 • FAX (814) 542-4906
www.bonneyforge.com

CUSTOMER:

Date 02/26/09

CUSTOMER'S Order No.:4885821-00

Bonney Order No00050587

SHIPPED TO

ITEM	QUANTITY	LOT NO.	GRADE OR SPECIFICATION NO. CHEMICAL ANALYSIS, PHYSICAL PROPERTIES, REMARKS:

1. THE FITTINGS SUPPLIED ARE IN ACCORDANCE WITH PURCHASE ORDER SPECIFICATIONS.
2. THE MATERIAL SUPPLIED IDENTIFIED AS A105N WAS NORMALIZED IN ACCORDANCE WITH ASTM A105 HEAT TREATING REQUIREMENTS.
3. CERTIFYING ASTM A105-05 / ASME SA105-04 EDITION.
4. ELONGATION TEST RESULTS ARE OBTAINED USING STANDARD ROUND SPECIMEN, 2 INCH OR 50 MM GAGE LENGTH.
5. THE PRODUCT SUPPLIED WAS INSPECTED IN ACCORDANCE WITH EN 10204:2004 EDITION TYPE 3.1 INSPECTION DOCUMENT. (EUROPEAN STANDARD)
6. THE MATERIAL SUPPLIED MEETS THE REQUIREMENTS OF BOTH NACE MR0103-2007 AND NACE MR0175/ISO 15156.

***** END OF CERTIFICATION *****

We certify that the data on this sheet is a true copy taken from our records of material furnished us by the production mill, or as obtained by additional laboratory checks.

by

Cris Boozel

CMTR: REV 1

QUALITY PROCESS MANAGER

CERTIFIED MILL TEST REPORT

(2)

The Best Value
Price, Quality, Service
All The Time.

LOG NO. 321552 PAGE 2

BONNEY FORGE
P.O. BOX 330 • 14496 CROGHAN PIKE • MOUNT UNION, PA 17066-0330
(814) 542-2545 • (800) 345-7546 • FAX (814) 542-4906
www.bonneyforge.com

CUSTOMER: [redacted]

Date 05/20/08

CUSTOMER'S Order No. 4883749-00

Bonney Order No. 00033088

SHIPPED T([redacted]

ITEM	QUANTITY	LOT NO.		GRADE OR SPECIFICATION NO. CHEMICAL ANALYSIS, PHYSICAL PROPERTIES, REMARKS:
				SA/A105N
006	25	56518	7551363	8-4X11/2 S160 A105N WELD B
				C .190 MN 1.100 P .006 S .022 SI .210
				NI .040 CU .140 CO .004 CR .050 MO .010
				V .000 AL .024 NB .010
				CE(LONG FORMULA) = 0.40
				T/S 76000 Y/S 53500 EL 32.85 RA 70.75
				BRINELL HARDNESS1: 137 HARDNESS2: 139
007	25	56667	7550015	21/2-11/4X1/4 3M A105N THRD T
				C .190 MN 1.000 P .010 S .023 SI .200
				NI .040 CU .130 CR .050 MO .010 V .002
				AL .021 NB .015
				CE(LONG FORMULA) = 0.38
				T/S 72500 Y/S 49500 EL 36.00 RA 70.00
				BRINELL HARDNESS1: 144 HARDNESS2: 144
008	75	3238	7550076	36-3 X 1/4 3000 A105N THRD T
				C .190 MN 1.200 P .008 S .022 SI .180
				NI .030 CU .150 CO .003 CR .050 MO .010
				V .000 AL .026 NB .013
				CE(LONG FORMULA) = 0.41
				T/S 78500 Y/S 55625 EL 33.00 RA 72.05
				BRINELL HARDNESS1: 139 HARDNESS2: 141
009	750	57440	7551568	5 -3 X 3/4 3000 A105N THRD T
				C .200 MN .990 P .012 S .020 SI .170
				NI .030 CU .120 CO .003 CR .160 MO .010
				V .000 AL .021 NB .013
				CE(LONG FORMULA) = 0.41
				T/S 75255 Y/S 51786 EL 28.65 RA 64.18
				BRINELL HARDNESS1: 127 HARDNESS2: 127

***** CONTINUED ON NEXT PAGE *****

We certify that the data on this sheet is a true copy taken from our records of material furnished us by the ~~production~~ mill, or as obtained by additional laboratory checks.

by

Cris Boozel

CMTR: REV 1

QUALITY PROCESS MANAGER

CERTIFIED MILL TEST REPORT

The Best Value
Price, Quality, Service
All The Time.

LOG NO. 321552 PAGE 6

BONNEY FORGE
P.O. BOX 330 • 14498 CROGHAN PIKE • MOUNT UNION, PA 17066-0
(814) 542-2545 • (800) 345-7548 • FAX (814) 542-4906
www.bonneyforge.com

CUSTOMER:

Date 05/20/08

CUSTOMER'S Order No. 4883749-00

Bonney Order No. 3000033088

SHIPPED T(

ITEM	QUANTITY	LOT NO.	GRADE OR SPECIFICATION NO. CHEMICAL ANALYSIS, PHYSICAL PROPERTIES, REMARKS:

1. THE FITTINGS SUPPLIED ARE IN ACCORDANCE WITH PURCHASE ORDER SPECIFICATIONS.
2. THE MATERIAL SUPPLIED IDENTIFIED AS A105N WAS NORMALIZED IN ACCORDANCE WITH ASTM A105 HEAT TREATING REQUIREMENTS.
3. CERTIFYING ASTM A105-05 / ASME SA105-04 EDITION.
4. ELONGATION TEST RESULTS ARE OBTAINED USING STANDARD ROUND SPECIMEN, 2 INCH OR 50 MM GAGE LENGTH.
5. THE PRODUCT SUPPLIED WAS INSPECTED IN ACCORDANCE WITH EN 10204:2004 EDITION TYPE 3.1 INSPECTION DOCUMENT. (EUROPEAN STANDARD)
6. THE MATERIAL SUPPLIED MEETS THE REQUIREMENTS OF BOTH NACE MR0103-2005 AND NACE MR0175-2002.

***** END OF CERTIFICATION *****

We certify that the data on this sheet is a true copy taken from our records of material furnished as by the production mill(s) or as obtained by additional laboratory checks

by

Cris Boozel

CMTR: REV 1

QUALITY PROCESS MANAGER

series

CHEMICAL INJECTION PUMPS

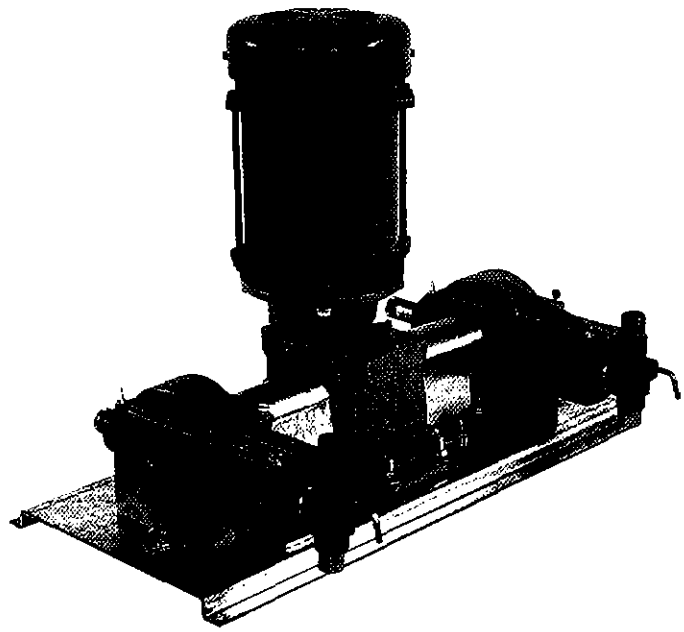

PRODUCT FEATURES

- Maximum discharge pressure: 6,000 PSI (414 bar) w/ 3/16" plunger
- Maximum volume 139 gallons per day (528 liters per day) w/ 1/2" plunger
- Each head is adjustable while running
- Available simplex, duplex, triplex, or quadruplex configurations
- Mix or match head sizes - pump the same or different chemicals
- Available in four stroke rates: 15, 30, 60, or 120 strokes per minute
- Each head is independently coupled – user friendly in the field
- 1/2 horsepower motor standard; 1 or 3 phase, TEFC or explosion proof; 50 or 60 hertz
- Available with 3/16", 1/4", 3/8", or 1/2" plunger

The 2500 Series of Texsteam chemical injection pumps are electric driven, positive displacement pumps utilizing C-faced motors and common gear reducers. The gear reducers are available in 15, 30, 60, and 120 strokes per minute configurations. By utilizing even further flexibility of a wide variety of plunger sizes, the 2500 Series can fill many application requirements of different flow and pressures.

The 2500 Series can have up to fluid ends, each driven off an eccentric cam gear which requires no oil.

Options:
Ceramic plungers which provide longer packing life and a wide variety of packing designed to meet the demands of many different chemical applications.

MODEL DESIGNATION

25F3 – 3

Number of Heads

Plunger Size
1 – 1/4"
3 – 3/8"
4 – 3/16"
5 – 1/2"

Stroke Speed
E – 120 SPM
F – 60 SPM
G – 30 SPM
H – 15 SPM

2500 Series

Plunger Size	Assembly Number
3/16 "	TB-1560

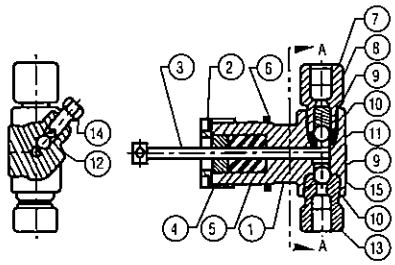

Plunger Size	Assembly Number
1/4 "	TB-1557
3/8"	TB-1558
1/2"	TB-1559

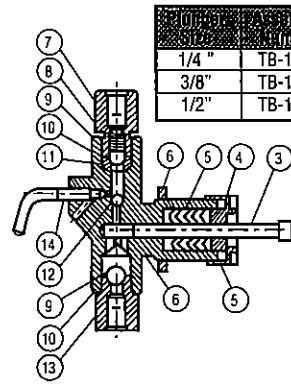

Item	Part #	Name	Material
1	TB-1483	Cover	ASTM A48 Cast Iron
2	TA-0136	1/4-20 x 3/4 Thumbscrew	Cad. Pl. Carbon Steel
3	TA-5821	Cover Gasket	Nitrile
4	TC-2048	Housing	ASTM A48 Cast Iron
5	TA-0142	HHCS 3/16"-18 x 1.25	Cad. Pl. Carbon Steel
6	TA-0144	Hex 5/16"18 Nut	Cad. Pl. Carbon Steel
7	TA-0300	Cut Washer 5/16	Cad. Pl. Carbon Steel
8	TC-2071	Simplex Base Plate	Galvanized Steel
	TC-2072	Duplex Base Plate	Galvanized Steel
	TC-2073	Triplex Base Plate	Galvanized Steel
	TC-2074	Quadruplex Base Plate	Galvanized Steel
9*	TB-1560	1/16" Head Assy.	316SS
	TB-1557	1/4" Head Assy.	316SS
	TB-1558	3/8" Head Assy.	316SS
	TB-1559	1/2" Head Assy.	316SS
10	TA-5964	Cross Head Bearing	Nylon
11	TA-5965	Cross Head Bearing	Nylon
12	TA-5966	Screen	SS
13	TB-1542	Cross Head	AISI 4140 Hr Steel
14	TA-5823	Eccentric Cam	C1018 Steel
15	TA-5830	Roller Bearing	Steel
16	TA-5831	10-24 UNC x 1/4 Set Screw	Carbon Steel
17	TA-2824	Woodruff Key	Carbon Steel
18	TA-5832	Sleeve Bearing	Reinforced Steel
19	TA-5826	Shaft Guard	Plastic
20	CF	Reducer	
21	TA-5822	Stroke Adjustor	C1213 C.R.S.
22	TA-5824	Stroke Adjustor Lock Nut	416SS
23	TA-2825	Adjusting Screw	416SS
24	TC-2070	Coupling Cover	Plastic
25	TA-1836	Coupling	Steel
26	TA-5937	Key	Steel
27	TA-5937	Key	Steel
28	TA-5950	Tandem Shaft	Steel
29	TA-5953	Drive Clip	Steel
30	CF	Motor 1/2 HP	

Plunger Size	Stroke Length	Maximum Discharge Pressure		Capacity per Stroke (Theo.)			
				Maximum		Minimum	
		PSI	Bars	cu. in.	cc	cu. in.	cc
3/16"	15	6000	(414)	2.4	(9)	.2	(1)
	30	6000	(414)	4.9	(19)	.5	(2)
	60	6000	(414)	9.8	(37)	1.0	(4)
	120	4000	(275)	18.7	(71)	1.9	(7)
1/4"	15	3200	(221)	4.3	(16)	.4	(2)
	30	4000	(275)	8.6	(33)	.9	(3)
	60	4000	(275)	17.3	(65)	1.7	(7)
	120	2100	(145)	34.6	(131)	3.5	(13)
3/8"	15	1450	(100)	9.8	(37)	1.0	(4)
	30	180	(124)	19.6	(74)	2.0	(7)
	60	1700	(117)	39.2	(148)	3.9	(15)
	120	950	(65)	78.5	(297)	7.8	(30)
1/2"	15	82	(56)	17.4	(66)	1.7	(7)
	30	1025	(71)	34.8	(88)	3.5	(9)
	60	1000	(70)	69.7	(264)	7.0	(26)
	120	525	(36)	139.5	(528)	13.9	(53)

* For 50 cycle motors multiply above volumes by .8

Item	Description	Material	Part Number 3/16"	1/4"	3/8"	1/2"
1	Body	SS	TC 2040	TC 0291	TC 0425	TB 0349
2	Gland Nut	303-SS	TA 4104	TA 4104	TA 4104	TA 4104
3*	Plunger	17-4PH	TA 6082	TA 6079	TA 6080	TA 6081
4	Gland	303-SS	TA 5642	TA 1463	TA 0957	TA 1219
5	Plunger	Buna-N	TA 3969	TA 1461	TA 1456	TA 0959
	Packing**	Hard	TA 3948	TA 2295	TA 1875	TA 1874
		Viton	TA 3967	TA 4102	TA 4101	TA 4103
		Teflon	TA 3966	TA 1642	TA 1234	TA 1012
6*	LockNut	Brass	TA 0225	TA 0225	TA 0225	TA 0225
7	Top Bushing	303 SS	TA 1496	TA 1496	TA 1496	TA 1496
8*	Ball Check Spring	316-SS	TA 0077	TA 0077	TA 0077	TA 0077
9*	Large Ball 3/8"	316-SS	TA 0054	TA 0054	TA 0054	TA 0054
10*	O-Ring	Buna-N	TA 0479	TA 0479	TA 0479	TA 0479
		Viton	TA 2093	TA 2093	TA 2093	TA 2093
11	Top Check Seat	303-SS	TB 0734	TB 0734	TB 0734	TB 0734
12*	Small Ball 1/4"	316-SS	TA 0126	TA 0126	TA 0126	TA 0126
13	Bottom Bushing	303-SS	TB 1213	TB 1213	TB 1213	TB 1213
14	Priming Valve	303-SS	TA 5462	TA 1497	TA 1497	TA 1497
15	Gasket	304-SS	TA 4394			

Plunger Size	Material							
	Buna-N		Hard		Viton		Teflon	
	PSIG	Bars	PSIG	Bars	PSIG	Bars	PSIG	Bars
3/16"	3000	(207)	6000	(414)	3500	(345)	3000	(207)
1/4"	2400	(165)	4000	(275)	3500	(240)	2400	(165)
3/8"	1500	(103)	1800	(124)	3500	(240)	1500	(103)
1/2"	1000	(69)	1025	(71)	3500	(240)	1000	(69)

GEAR REDUCER OIL LEVELS

Single Stage C-Mount
(input shaft/output shaft horizontal)

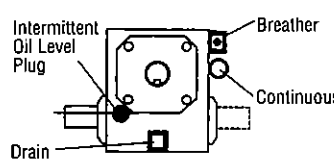

Two-Stage - Helical C-Mount
(input shaft horizontal)

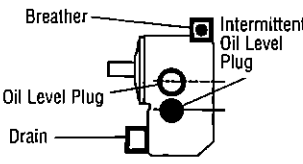

REDUCER OIL CHANGE

- Continuous run units Change every 2,000 hours
- Intermittent units: Change every 2.500 running hours or six months
- Use Mobil cylinder 600W, or Texaco meriopia 460 for 32°F to 100°F, or Mobil SHC 634 for 0°F to 135°F or an equivalent major oil brand.

USE INTERMITIENT (OR "HIGH") OIL LEVEL FOR OPERATION OF 800 RPM OR LESS OR FOR INPUT SHAFT SPEED OF 800 RPM OR LESS.

2500 SIMPLEX

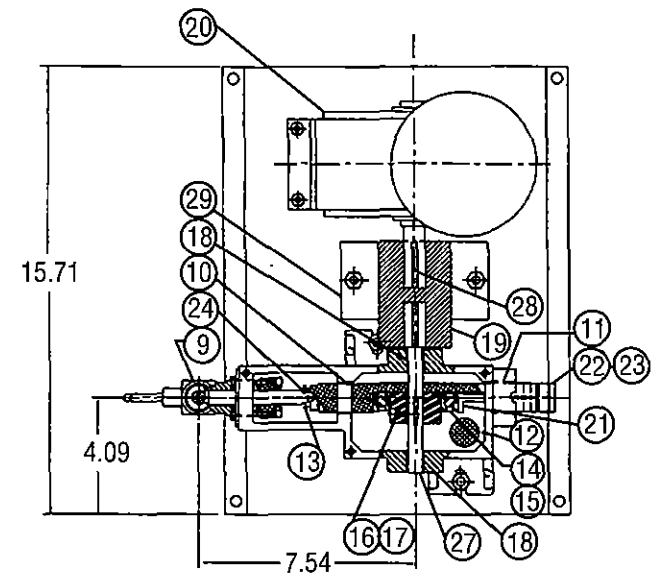

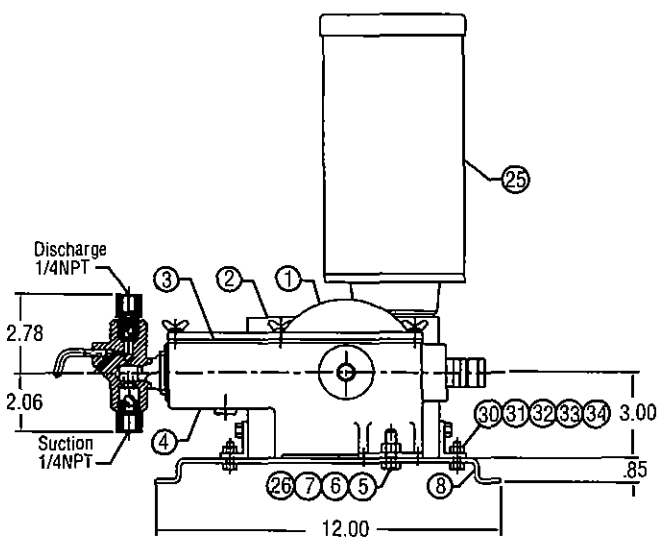

Parts List

Item	Part No.	Qty Req'd	Name	Material
1	TB-1483	1	Cover	ASTM A48 C.I.
2	P86-025075-0200	3	Thumbscr.	Cad. Pl. Steel
3	TA-5963	1	Gasket Cover	Nitrile
4	TC-2048	1	Housing	ASTM A48 C.I.
5	P01-031125-3900	2	HHCS 5/16-18	SS
6	P25-031000-3900	2	Nut Hex 5/16-18	Cad. Pl. Steel
7	P53-031000-3900	2	Cut Washer 5/16	Cad. Pl. Steel
8	TC-2197	1	Base Plate	Galv. Steel
9	TB-0755	1	1/4 SS LP Head Assy.	316 SS
10	TA-5964	1	Cross Head Bearing	Nylon
11	TA-5965	1	Cross Head Bearing	Nylon
12	TA-5966	1	Screen	SS
13	TB-1542	1	Cross Head	AISI 4140 HR Steel
14	TA-5823	1	Eccentric Cam	C 1018 Steel
15	TA-5830	1	Roller Bearing	Steel
16	P20-025050-0200	1	St. Scr.	Carbon Steel
17	TA-6386	1	Key	Carbon Steel
18	TA-6713	2	Sleeve Bearing	Reinforced Steel
19	TA-6714	1	Coupling	Steel
20		1	Reducer	
21	TA-5822	1	Stroke Adjustor	C1213 C.R.S
22	TA-5824	1	Lock Nut Stroke Adj.	416 SS
23	TA-5825	1	Adjusting Screw	416 SS
24	TA-5953	1	Drive Clip	Steel
25		1	Motor- 1/2 HP	
26	P52-031000-3900	2	Lock Washer 5/16	Cad. Pl. Steel
27	TB-1677	1	Drive Shaft	Steel
28	TA-6720	2	Drive Shaft Key	Steel
29	TB-1700	1	Coupling Guard	Plastic
30	P01-037125-3900	4	HHCS 3/8-16	
31	P25-037000-3900	4	Nut Hex 3/8-16	
32	P53-037000-3900	4	Cut Washer 3/8	
33	P52-037000-3900	4	Lock Washer 3/8	
34	TA-6716	4	Spacer	

2500 DUPLEX

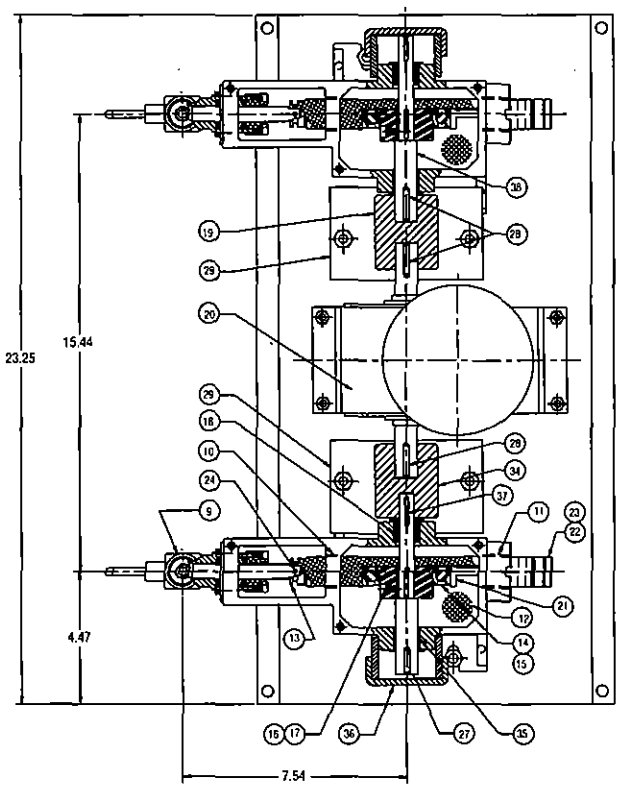

Parts List

Item	Description	No. Req'd	Name	Material
1	TB-1483	2	Cover	ASTM A48 C.I.
2	P86-025075-0200	6	Thumbscr.	Cad. Pl. Steel
3	TA-5963	2	Gasket Cover	Nitrile
4	TC-2048	2	Housing	ASTM A48 C.I.
5	P01-031125-3900	4	HHCS 5/16-18	SS
6	P25-031000-3900	4	Nut Hex 5/16-18	SS
7	P53-031000-3900	[illegible]	Cut Washer 5/16	SS
8	TC-2197	[illegible]	Base Plate	Galv. Steel
9	TB-0755	2	1/4 SS LP Head Assy.	316 SS
10	TA-5964	2	Cross Head Bearing	Nylon
11	TA-5965	2	Cross Head Bearing	Nylon
12	TA-5966	2	Screen	SS
13	TB-1542	2	Cross Head	AISI 4140 HR Steel
14	TA-5823	2	Eccentric Cam	C 1018 Steel
15	TA-5830	2	Roller Bearing	Steel
16	P20-025050-0200	2	St. Scr.	Cad. Pl. Steel
17	TA-6386	2	Key	Steel
18	TA-6935	2	Sleeve Bearing-Small	Nylon
19	TA-6714	1	Coupling-Drive	Steel
20		1	Reducer	
21	TA-5822	2	Stroke Adjustor	C1213 C.R.S
22	TA-5824	2	Lock Nut Stroke Adj.	416 SS
23	TA-5825	2	Adjusting Screw	416 SS
24	TA-5953	2	Drive Clip	Steel
25		1	Motor- 1/2 HP	
26	P52-031000-3900	4	Lock Washer 5/16	SS
27	TB-1735	1	Drive Shaft - DPLX	17-4PH. SS
28	TA-6720	3	Drive Shaft Key	Steel
29	TB-1736	2	Coupling Guard	Galv. Steel
30	P01-037125-3900	4	HHCS 3/8-16	SS
31	P25-037000-3900	4	Nut Hex 3/8-16	SS
32	P53-037000-3900	4	Cut Washer 3/8	SS
33	P52-037000-3900	4	Lock Washer 3/8	SS
34	TA-6953	1	Coupling-Drive	Steel
35	TA-6936	2	Sleeve Bearing-Large	Nylon
36	TA-6938	2	Shaft End Cap	Plastic
37	TA-5937	1	Shaft Key	Steel
38	TB-1734	1	Drive Shaft - SPLX	17-4PH. SS

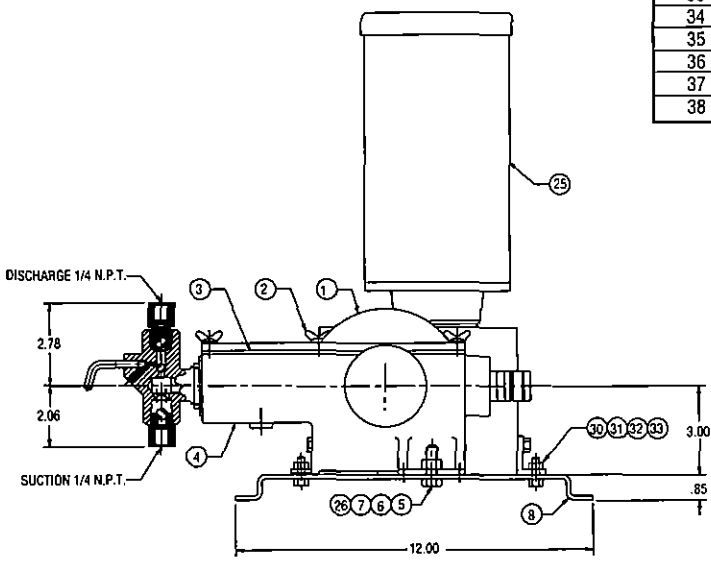

2500 TRIPLEX

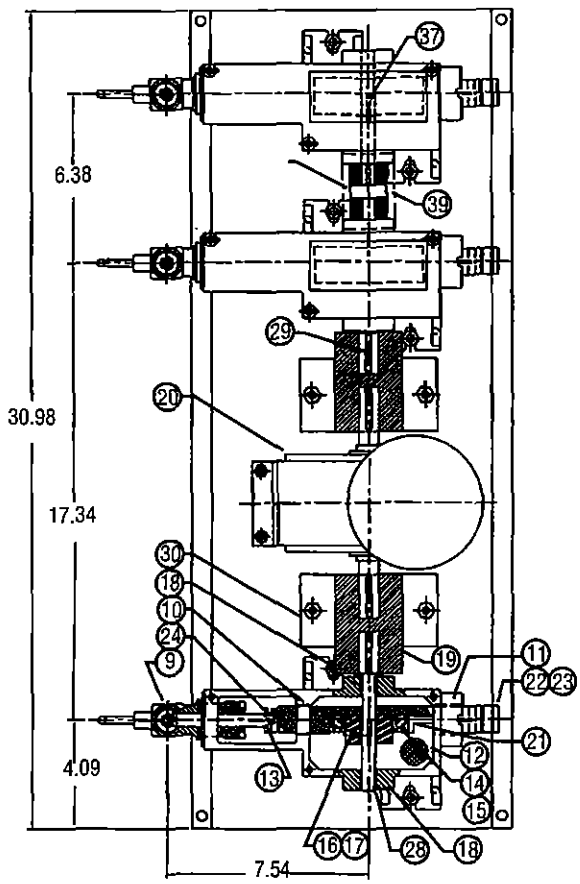

Parts List

1	TB-1483	3	Cover	ASTM A48 C.I.
2	P86025075-0200	9	Thumbscr.	Cad. Pl. Steel
3	TA-5963	3	Gasket Cover	Nitrile
4	TC-2048	3	Housing	ASTM A48 C.I.
5	P01-031125-3900	6	HHCS 5/16-18	SS
6	P25-031000-3900	6	Nut Hex 5/16-18	SS
7	P53-031000-3900	6	Cut Washer 5/16	SS
8	TC-2197	1	Base Plate	Galv. Steel
9	TB-0755	3	1/4 SS LP Head Assy.	316 SS
10	TA-5964	3	Cross Head Bearing	Nylon
11	TA-5965	3	Cross Head Bearing	Nylon
12	TA-5966	3	Screen	SS
13	TB-1542	3	Cross Head	AISI 4140 HR Steel
14	TA-5823	3	Eccentric Cam	C 1018 Steel
15	TA-5830	3	Roller Bearing	Steel
16	P20-025050-0200	3	St. Scr.	Cad. Pl. Steel
17	TA-6386	3	Key	Steel
18	TA-6935	3	Sleeve Bearing, Small	Nylon
19	TA-6714	1	Coupling Drive	Steel
20		1	Reducer	
21	TA-5822	3	Stroke Adjustor	C1213 C.R.S
22	TA-5824	3	Lock Nut Stroke Adj.	416 SS
23	TA-5825	3	Adjusting Screw	416 SS
24	TA-5953	3	Drive Clip	Steel
25		1	Motor- 1/2 HP	
26	P52-031000-3900	6	Lock Washer 5/16	SS
27	TB-1735	1	Drive Shaft - DPLX	17-4 PH. SS
28	TA-6720	6	Drive Shaft Key	Steel
29	TB-1736	1	Coupling Guard	Galv. Steel
30	P01-037125-3900	3	HHCS 3/8-16	SS
31	P25-037000-3900	3	Nut Hex 3/8-16	SS
32	P53-037000-3900	3	Cut Washer 3/8	SS
33	P52-037000-3900	3	Lock Washer 3/8	SS
34	TA-6953	1	Coupling Drive	Steel
35	TA-6936	3	Sleeve Bearing, Large	Nylon
36	TA-6938	1	Shaft End Cap	Plastic
37	TA-5937	3	Shaft Key	Steel
38	TB-1734	1	Drive Shaft - Splx.	17-4 PH. SS
39	TA-6954	1	Coupling Drive	Steel
40	TC-2070	1	Coupling Guard	Plastic
41	TA-4251	1	Spacer	Nylon

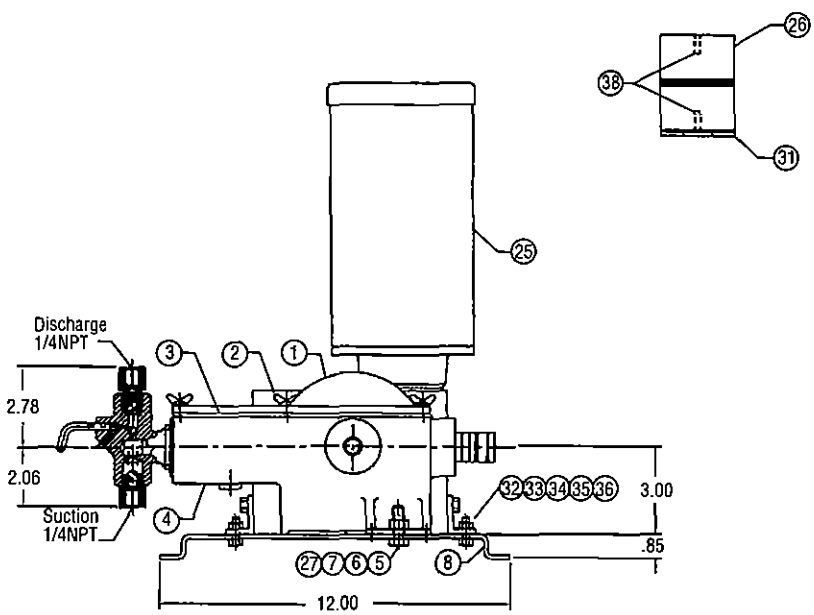

2500 QUADRUPLEX

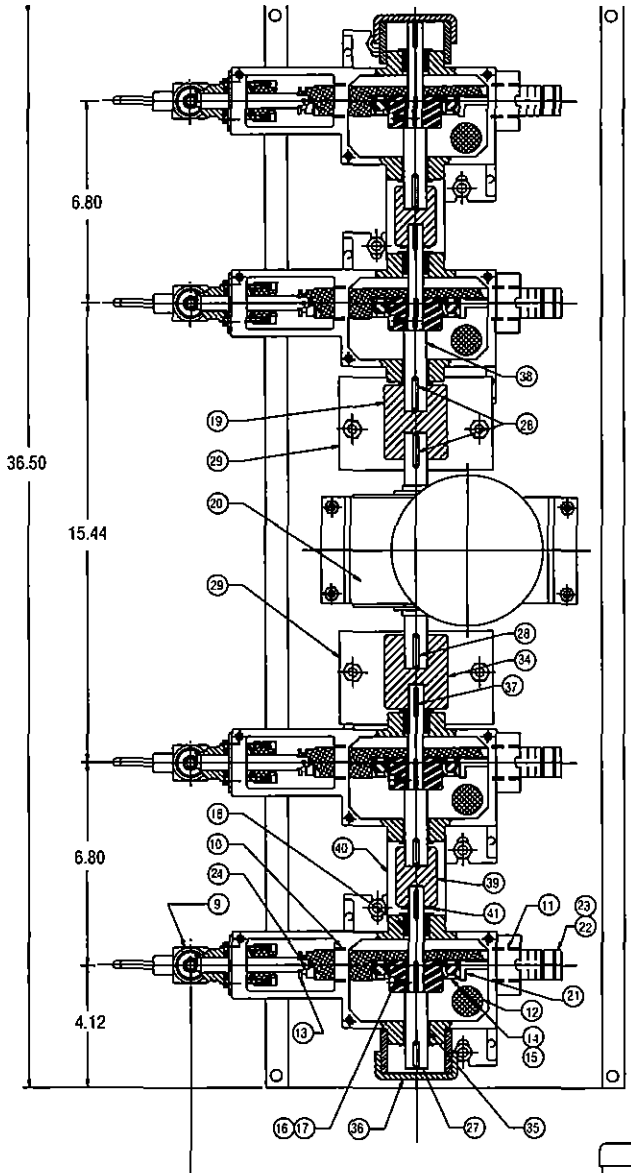

Parts List

Item	Part No.	Qty. Req'd.	Name	Material
1	TB-1483	4	Cover	ASTM A48 C.I.
2	P86025075-0200	12	Thumbscr.	Cad. Pl. Steel
3	TA-5963	4	Gasket Cover	Nitrile
4	TC-2048	4	Housing	ASTM A48 C.I.
5	P01-031125-3900	8	HHCS 5/16-18	SS
6	P25-031000-3900	8	Nut Hex 5/16-18	SS
7	P53-031000-3900	8	Cut Washer 5/16	SS
8	TC-2197	1	Base Plate	Galv. Steel
9	TB-0755	4	1/4 SS LP Head Assy.	316 SS
10	TA-5964	4	Cross Head Bearing	Nylon
11	TA-5965	4	Cross Head Bearing	Nylon
12	TA-5966	4	Screen	SS
13	TB-1542	4	Cross Head	AISI 4140 HR Steel
14	TA-5823	4	Eccentric Cam	C 1018 Steel
15	TA-5830	4	Roller Bearing	Steel
16	P20-025050-0200	4	St. Scr.	Cad. Pl. Steel
17	TA-6386	4	Key	Steel
18	TA-6935	4	Sleeve Bearing, Small	Nylon
19	TA-6714	1	Coupling Drive	Steel
20		1	Reducer	
21	TA-5822	4	Stroke Adjustor	C1213 C.R.S
22	TA-5824	4	Lock Nut Stroke Adj.	416 SS
23	TA-5825	4	Adjusting Screw	416 SS
24	TA-5953	4	Drive Clip	Steel
25		1	Motor- 1/2 HP	
26	P52-031000-3900	8	Lock Washer 5/16	SS
27	TB-1735	2	Drive Shaft - DPLX	17-4 PH. SS
28	TA-6720	5	Drive Shaft Key	Steel
29	TB-1736	2	Coupling Guard	Galv. Steel
30	P01-037125-3900	4	HHCS 3/8-16	SS
31	P25-037000-3900	4	Nut Hex 3/8-16	SS
32	P53-037000-3900	4	Cut Washer 3/8	SS
33	P52-037000-3900	4	Lock Washer 3/8	SS
34	TA-6953	1	Coupling Drive	Steel
35	TA-6936	4	Sleeve Bearing, Large	Nylon
36	TA-6938	2	Shaft End Cap	Plastic
37	TA-5937	3	Shaft Key	Steel
38	TB-1734	2	Drive Shaft - Splx.	17-4 PH. SS
39	TA-6954	2	Coupling Drive	Steel
40	TC-2070	2	Coupling Guard	Plastic
41	TA-4251	2	Spacer	Nylon

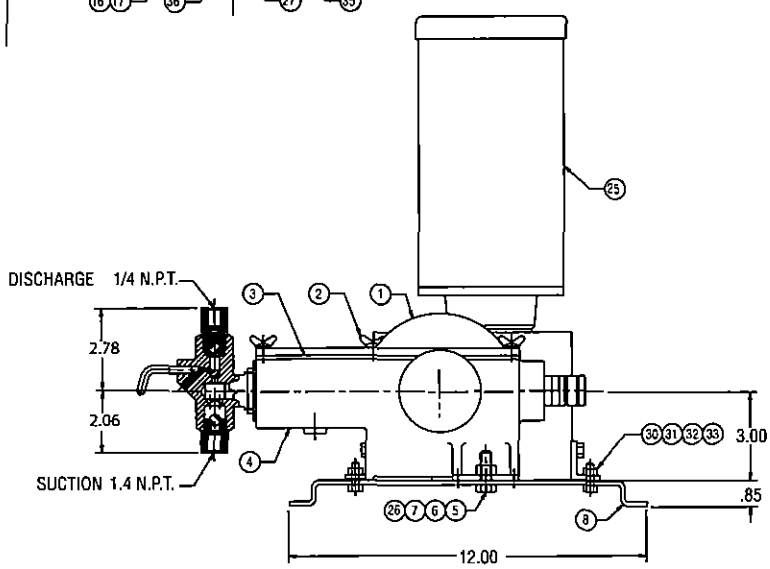

INSTALLATION AND START-UP INSTRUCTIONS

INSTALLATION

Pump Location - An Important Factor

- Plan ahead for proper pump mounting-position it to provide for efficient routing of suction and discharge lines, as well as electric service
- Avoid long suction lines
- Provide for a flooded suction line whenever possible
- Pump fluid lines and connections operate best when there is a minimum restriction to the medium flow
- Install the proper electrical starters and disconnect switches
- It is recommended that a solid mounting support be provided—take advantage of the factory installed holes in the base plate for securing the pump

FLUID END

- All fluid connections, both suction and discharge, should be sealed tight. Fluid end connections are 1/4" NPT
- The suction connection is at the bottom of the fluid end, and the discharge connection is at the top.

MOTOR

- A conduit connection is provided at the motor for electrical connections.
- Assure the proper electrical service has been provided
- Assure all connections are tight, in their proper location, properly grounded, and fused

GEAR REDUCER

- Check the oil level of the gear reducer
- If the oil level is below the output shaft oil plug, refill to the plug Mobil Cylinder Oil 600W or Texaco Metropia 460
- For low temperature applications, use Mobil SHC 634

START UP

- Open the priming valve on the fluid end assembly
- Start the pump motor
- Allow the pump to run until a clear, bubbleless stream of media comes out of the priming valve
- Close the priming valve
- Check the packing for proper sealing. If it leaks, stop the pump and make the necessary adjustments.
- Adjust the stroke adjustment knob to obtain the desired flow rate.

PREVENTIVE MAINTENANCE

- Check periodically (minimum once a month) and apply a small amount of grease to the cam bearing and to the crosshead areas that cycle through the linear bearings.
- Check the packing regularly. If leakage is observed, stop the pump. Make a small adjustment by turning the gland nut. Restart the pump. (Do not over-tighten the packing as this will reduce the packing life and possibly damage the plunger.

It is always important to assure the packing material is compatible with the media being pumped – check for swollen or deteriorated seals.

TEXSTEAM

Dresser, Inc.

DRESSER

Dresser Industrial Products Group

16240 Port Northwest Drive
Houston, Texas 77041-2645
www.dresser.com

Outside US Ph: 832.590.2306
txtpumps@dresser.com

Inside US Ph: 800.945.9898
Fax: 713.849.2879
www.texsteampumps.com

Series 2500
7.07

©2007 Dresser, Inc.
Texsteam is a registered trademark of Dresser, Inc.

MS-18378

Fisher® D4 Control Valve Assembly

Contents

Introduction 1
Scope of Manual 1
Description 1
Specifications 1
Installation 4
Spring Adjustment 5
Maintenance 6
Valve Plug and Seat Ring 6
Valve Packing 7
Actuator 9
Parts Ordering 12
Repair Kits 15
Parts List 15
Appendix A 17

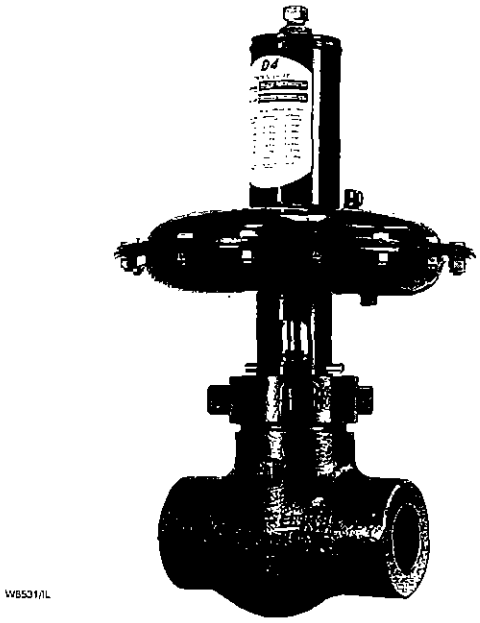

Figure 1. Fisher® D4 Control Valve

Introduction

Scope of Manual

This instruction manual provides installation, maintenance, and parts information for the Fisher® D4 control valve.

Do not install, operate, or maintain a D4 control valve without first • being fully trained and qualified in valve, actuator, and accessory installation, operation, and maintenance, and • carefully reading and understanding the contents of this manual. If you have any questions about these instructions, contact your Emerson Process Management sales office before proceeding.

Description

The D4 control valve is a compact, rugged valve designed primarily for high-pressure throttling applications. This valve is ideal for use on pressure and flow control applications within the oil and gas production industry. The D4 valve also makes an excellent dump valve for high-pressure separators and scrubbers.

The D4 control valve meets the metallurgical requirements of NACE MR0175/ISO 15156 without environmental limits for temperatures below 135°C (275°F). If the temperature is above 135°C (275°F), the N07718 Belleville washers will impose some limits, as shown in table 3.

Specifications

Table 1 lists specifications for the D4 control valve. Some of the specifications for a given control valve as it originally comes from the factory are stamped on a nameplate located on the actuator spring barrel.

Table 1. Specifications

Available Configurations

Spring-to-Close
Spring-to-Open

Valve Body Sizes and End Connection Styles(1)

See table 2

Maximum Inlet Pressures and Temperatures(1)

If the valve nameplate shows an ASME pressure-temperature class, maximum inlet pressure and temperature is consistent with the applicable class per ASME B16.34. If the nameplate does not show an ASME class, it will show a maximum cold working pressure at 38°C (100°F) (for example, 293 bar [4250 psi])

Maximum Pressure Drops(1)

See tables 4, 5, 6, and 7

Input Signal to Actuator

See tables 4, 5, 6, and 7

Actuator Maximum Casing Pressure(1)

3.4 bar (50 psig)

Shutoff Classification per ANSI/FCI 70-2 and IEC 60534-4

Class IV

Material Temperature Capabilities(1)

Actuator Assembly: -40 to 93°C (-40 to 200°F)

Valve Body Assembly:
Standard Bonnet O-Ring: -46 to 149°C (-50 to 300°F)
Optional Fluorocarbon Bonnet O-Ring: -23 to 204°C (-10 to 400°F)

Flow Characteristic

Equal percentage

Flow Direction

Flow up only

Port Diameters

See table 2

Valve Plug Travel

19 mm (0.75 inch)

Valve Plug Style

Micro-Form valve plug

Actuator Diaphragm Effective Area

452 cm^2 (69 $inches^2$)

Actuator Pressure Connection Size

1/4 NPT internal

1. The pressure or temperature limits in the referenced tables and any applicable ASME code limitations should not be exceeded.

Table 2. Valve Sizes and Connection Styles

VALVE SIZE, NPS	PORT DIAMETER, (INCHES)	SCREWED	RAISED FACE (RF) FLANGED				RING TYPE JOINT (RTJ) FLANGED	
		4250 psi	CL150	CL300	CL600	CL900 and CL1500	CL600	CL900 and CL1500
1	0.25, 0.375, 0.5, 0.75	X	X	X	X	X	X	X
2	0.25, 0.375, 0.5 0.75, 1, 1.25	X	X	X	X	X	X	X

X = Available construction.

Table 3. D4 Environmental Limits for NACE MR0175/ISO 15156 with Sour Trim

MAXIMUM TEMPERATURE		MAXIMUM H_2S PARTIAL PRESSURE		COMPATIBLE WITH ELEMENTAL SULFUR?
°C	°F	MPa	psia	
204	400	1.4	200	No
199	390	2.3	330	No
191	375	2.5	360	No
149	300	2.8	400	No
135	275	No Limit		Yes

Table 4. Maximum Shutoff Pressure Drops(1) for Fisher® D4 Control Valves (Spring-to-Close) When Used with Typical Control Instrumentation(2)

INPUT SIGNAL TO ACTUATOR		0 to 1.2 Bar (0 to 18 Psig)		0 to 1.4 Bar (0 to 20 Psig)		0 to 2.0 Bar (0 to 30 Psig)		0 to 2.3 Bar (0 to 33 Psig)		0 to 2.4 Bar (0 to 35 Psig)		0 to 3.4 Bar (0 to 50 Psig)	
SPRING		Light Rate				Heavy Rate							
INITIAL SPRING SETTING		0.77 Bar (11.2 Psig)		0.77 Bar (11.2 Psig)		0.85 Bar (12.4 Psig)		1.05 Bar (15.3 Psig)		1.18 Bar (17.1 Psig)		1.18 Bar (17.1 Psig)	
PORT DIAMETER		Maximum Pressure Drop											
mm	Inches	Bar	Psi	Bar	Psi	Bar	Psi	Bar	Psi	Bar	Psi	Bar	Psi
6.4	0.25	293(3)	4250(3)	293(3)	4250(3)	293	4250	293	4250	293	4250	293	4250
9.5	0.375	293(3)	4250(3)	293(3)	4250(3)	293	4250	293	4250	293	4250	293	4250
12.7	0.5	191	2765	191	2765	219	3180	288	4180	293	4250	293	4250
19.1	0.75	80	1160	80	1160	92	1340	123	1785	143	2080	143	2080
25.4	1	42	610	42	610	49	715	67	965	78	1130	78	1130
31.8	1.25	25	365	25	365	30	430	41	590	48	700	48	700

1. The pressure or temperature limits in the referenced tables and any applicable ASME code limitations should not be exceeded.
2. For example, use the column marked 0-1.4 bar (0-20 psig) for a 0.21-1.0 bar (3-15 psig) pneumatic controller with 1.4 bar (20 psig) supply pressure.
3. For applications with downstream pressure in excess of 196 bar (2845 psig), use 196 bar (2845 psig) for Maximum Shutoff Pressure.

Table 5. Maximum Shutoff Pressure Drops(1) for Fisher® D4 Control Valves (Spring-to-Close) When Used with Instrumentation with Restricted Output Range(2)

INPUT SIGNAL TO ACTUATOR		0.4 to 2.0 Bar (6 to 30 Psig)		0.14 to 2.3 Bar (2 to 33 Psig)	
SPRING		Heavy Rate		Heavy Rate	
INITIAL SPRING SETTING		0.97 Bar (14.0 Psig)		1.17 Bar (17.0 Psig)	
PORT DIAMETER		Maximum Pressure Drop			
mm	Inches	Bar	Psi	Bar	Psi
6.4	0.25	293(3)	4250(3)	293	4250
9.5	0.375	210(3)	3045(3)	293	4250
12.7	0.5	113	1635	282	4095
19.1	0.75	45	655	120	1750
25.4	1	23	330	65	945
31.8	1.25	13	185	39	580

1. The pressure or temperature limits in the referenced tables and any applicable ASME code limitations should not be exceeded.
2. For example, an Electro-Pneumatic Transducer calibrated for 0.4-2.0 bar (6-30 psig) output pressure.
3. For applications with downstream pressure in excess of 118 bar (1715 psig), use 118 bar (1715 psig) for Maximum Shutoff Pressure.

Table 6. Maximum Shutoff Pressure Drops[1] for Fisher® D4 Control Valves (Spring-to-Open) When Used with Typical Control Instrumentation[2]

INPUT SIGNAL TO ACTUATOR		0 to 1.2 Bar (0 to 18 Psig)		0 to 1.4 Bar (0 to 20 Psig)		0 to 2.0 Bar (0 to 30 Psig)		0 to 2.3 Bar (0 to 33 Psig)		0 to 2.4 Bar (0 to 35 Psig)		0 to 3.4 Bar (0 to 50 Psig)	
SPRING		Light Rate				Heavy Rate							
INITIAL SPRING SETTING		0.23 Bar (3.4 Psig)		0.23 Bar (3.4 Psig)		0.28 Bar (4.0 Psig)		0.28 Bar (4.0 Psig)		0.28 Bar (4.0 Psig)		0.28 Bar (4.0 Psig)	
PORT DIAMETER		Maximum Pressure Drop											
mm	Inches	Bar	Psi	Bar	Psi	Bar	Psi	Bar	Psi	Bar	Psi	Bar	Psi
6.4	0.25	293[3]	4250[3]	293[3]	4250[3]	293	4250	293	4250	293	4250	293	4250
9.5	0.375	293[3]	4250[3]	293[3]	4250[3]	293	4250	293	4250	293	4250	293	4250
12.7	0.5	187	2715	233	3380	293	4250	293	4250	293	4250	293	4250
19.1	0.75	78	1135	99	1430	147	2130	178	2575	198	2875	293	4250
25.4	1	41	600	53	765	80	1160	97	1410	109	1575	195	2830
31.8	1.25	24	355	32	465	49	715	60	875	68	985	123	1785

1. The pressure or temperature limits in the referenced tables and any applicable ASME code limitations should not be exceeded.
2. For example, use the column marked 0-1.4 bar (0-20 psig) for a 0.21-1.0 bar (3-15 psig) pneumatic controller with 1.4 bar (20 psig) supply pressure.
3. For applications with downstream pressure in excess of 190 bar (2760 psig), use 190 bar (2760 psig) for Maximum Shutoff Pressure.

Table 7. Maximum Shutoff Pressure Drops[1] for Fisher® D4 Control Valves (Spring-to-Open) When Used with Instrumentation with Restricted Output Range[2]

INPUT SIGNAL TO ACTUATOR		0.4 to 2.0 Bar (6 to 30 Psig)		0.14 to 2.3 Bar (2 to 33 Psig)	
SPRING		Heavy Rate		Heavy Rate	
INITIAL SPRING SETTING		0.69 Bar (10.0 Psig)		0.42 Bar (6.1 Psig)	
PORT DIAMETER		Maximum Pressure Drop			
mm	Inches	Bar	Psi	Bar	Psi
6.4	0.25	293[3]	4250[3]	293	4250
9.5	0.375	293[3]	4250[3]	293	4250
12.7	0.5	196	2845	293	4250
19.1	0.75	82	1195	156	2265
25.4	1	43	630	85	1235
31.8	1.25	26	380	52	765

1. The pressure or temperature limits in the referenced tables and any applicable ASME code limitations should not be exceeded.
2. For example, an Electro-Pneumatic Transducer calibrated for 0.4-2.0 bar (6-30 psig) output pressure.
3. For applications with downstream pressure in excess of 202 bar (2925 psig), use 202 bar (2925 psig) for Maximum Shutoff Pressure.

Installation

WARNING

Always wear protective gloves, clothing, and eyewear when performing any installation operations to avoid personal injury.

To avoid personal injury or property damage caused by bursting of pressure-retaining parts or by uncontrolled process fluid, be certain the service conditions do not exceed the limits shown on the valve nameplate and in tables 1, 4, 5, 6, and 7. Use pressure-relieving devices required by government or accepted industry codes and good engineering practices.

Check with your process or safety engineer for any additional measures that must be taken to protect against process media.

If installing into an existing application, also refer to the WARNING at the beginning of the Maintenance section in this instruction manual.

WARNING

When ordered, the valve configuration and construction materials were selected to meet particular pressure, temperature, pressure drop, and controlled fluid conditions. Responsibility for the safety of process media and compatibility of valve materials with process media rests solely with the purchaser and

end-user. Since some body/trim material combinations are limited in their pressure drop and temperature ranges, do not apply any other conditions to the valve without first contacting your Emerson Process Management sales office.

WARNING

Avoid personal injury or property damage caused by possible actuator failure. The use of a rigidly-mounted support on the actuator casing may cause additional stress on the actuator leading to premature wear and/or failure of the actuator components.

CAUTION

To avoid product damage, inspect the valve before installation for any damage or any foreign material that may have collected in the valve body. Also remove any pipe scale, welding slag, or other foreign material from the pipeline.

1. Before installing the control valve assembly, inspect it for any damage and for any foreign material that may have collected in the valve body.

2. Remove any pipe scale, welding slag, and other foreign material from the pipeline.

3. The control valve can be installed in any position, but normally the actuator is vertical above the valve. Install the valve so the flow direction arrow on the side of the valve indicates the direction of the process flow.

4. Install the valve following local and national piping codes when they apply to the application. For screwed connections, treat the external pipe threads with a good grade pipe compound. For flanged valves, use suitable gaskets between valve and pipeline flanges.

5. If continuous operation is required during maintenance and inspection, install a conventional three-valve bypass around the valve.

6. Connect loading pressure for the Spring-to-Open configuration to the 1/4-18 NPT connection in the upper casing assembly (key 23) as shown in figure 5. The Spring-to-Close configuration loading pressure connection is in the lower casing assembly (key 39) as shown in figure 4.

Spring Adjustment

The spring has a fixed pressure span over which loading pressure will stroke the valve. Adjustment of the spring compression shifts the span so that more or less loading pressure is required to start travel. Since the span does not change, there will be a corresponding increase or decrease in the pressure requirements at the end of the valve stroke.

In order to maximize shutoff pressure drop values, the actuator spring must be accurately adjusted for each Input Signal Pressure Range. If the actuator has been disassembled or pressure conditions have changed, the spring may require adjustment. Refer to tables 2 and 4 to determine the Initial Spring Set values based on the Input Signal range that is available to the actuator. These values include packing friction.

Spring-to-Close

Refer to figure 4.

1. Loosen the adjusting screw nut (key 44).

2. Turn the adjusting screw (key 31) clockwise to compress the spring or counterclockwise to decrease spring compression.

3. After adjustment, tighten the adjusting screw nut (key 44).

Spring-to-Open

Refer to figure 5.

1. Unscrew the spring case assembly (key 27).

2. Turn the adjusting stem nut (key 44) clockwise to compress the spring or counterclockwise to decrease spring compression.

3. After adjustment, replace the spring case assembly (key 27).

Maintenance

Refer to figure 4.

Valve parts are subject to normal wear and must be inspected and replaced as necessary. The frequency of inspection and maintenance depends on the severity of the service conditions.

WARNING

Avoid personal injury from sudden release of process pressure or bursting of parts. Before performing any maintenance operations:

- **Do not remove the actuator from the valve while the valve is still pressurized.**
- **Always wear protective gloves, clothing, and eyewear when performing any maintenance operations to avoid personal injury.**
- **Disconnect any operating lines providing air pressure, electric power, or a control signal to the actuator. Be sure the actuator cannot suddenly open or close the valve.**
- **Use bypass valves or completely shut off the process to isolate the valve from process pressure. Relieve process pressure on both sides of the valve. Drain the process media from both sides of the valve.**
- **Vent the power actuator loading pressure and relieve any actuator spring precompression.**
- **Use lock-out procedures to be sure that the above measures stay in effect while you work on the equipment.**
- **The valve packing box may contain process fluids that are pressurized, *even when the valve has been removed from the pipeline.* Process fluids may spray out under pressure when removing the packing hardware or packing rings.**
- **Check with your process or safety engineer for any additional measures that must be taken to protect against process media.**

Valve Plug and Seat Ring

The D4 control valve is designed to allow easy access to the valve plug and seat ring without disturbing the packing. Refer to other sections of this instruction manual if additional maintenance is required.

Disassembly

1. Remove the loading pressure tubing and any accessories that may hamper disassembly.

2. Break the hammer nut (key 6) loose with a hammer. Continue turning the hammer nut by using a hammer or a large adjustable wrench, tightened around one ear of the hammer nut. If the bonnet is stuck on the valve, continue to unscrew the hammer nut. The hammer nut will contact the spring pins (key 7) and will force the bonnet out of the valve. Carefully lift the actuator, bonnet, and valve plug assembly from the valve body.

WARNING

The spring pins must always be in place during valve operation. They provide a safeguard against injury when the unit is being disassembled.

3. Use a socket wrench to loosen the seat ring (key 3).

4. Remove the seat ring (key 3) and seat ring gasket (key 9) from the valve body.

5. Inspect parts for wear or damage that would prevent proper operation of the valve body. Carefully clean the seat ring gasket surfaces and seat ring threads.

WARNING

Be careful to avoid damaging the seating surface on the valve plug or seat ring as damage in these areas will allow excessive leakage at shutoff. Avoid damaging the highly polished valve stem surface. A damaged valve stem could cut the packing and allow process fluid to leak to the atmosphere.

Table 8. Torque for Seat Ring (Key 3)

VALVE SIZE	RECOMMENDED TORQUE	
NPS	N•m	Lbf•ft
1	407	300
2	698	515

6. **For spring-to-close only:** To remove the valve plug (key 2), drive out the groove pin (key 4) and unscrew the valve plug from the stem (key 47). If the groove pin (key 4) is not exposed, verify that downward movement of the stem is not restricted by instrument linkages attached to the stem (key 47).

If the valve plug cannot be easily unscrewed from the stem, use a punch to keep the stem from turning as the plug is removed.

7. **For spring-to-open only:** To remove the valve plug (key 2), first remove the spring case assembly (key 27). Remove the adjustment screw nut (key 44), the upper spring seat (key 29), and the spring (key 30). Push the adjustment stem (key 31) fully downward until the diaphragm plate (key 40) contacts the cap screws (key 38), exposing the groove pin (key 4) in the plug. If the groove pin (key 4) is not exposed, verify that downward movement of the stem is not restricted by instrument linkages attached to the stem (key 47). Drive out the groove pin (key 4) and unscrew the valve plug from the stem (key 47).

If the valve plug cannot be easily unscrewed from the stem, use a punch to keep the stem from turning as the plug is removed.

Assembly

1. Make sure the bonnet O-ring (key 8) is on the bonnet and lubricated with lithium grease (key 49).

2. Install the plug (key 2) on the stem (key 47) and insert a new groove pin (key 4).

3. Thoroughly clean the seat ring and bonnet threads in the valve body (key 1). Also clean the valve body seat ring gasket surfaces.

4. Apply anti-seize lubricant (key 54) to the threads of the seat ring (key 3), and its mating threads in the valve body.

5. Apply anti-seize lubricant (key 54) to the seat ring gasket (key 9) and install into the valve body.

6. Screw the seat ring into the valve body. Use a socket wrench to tighten the seat ring to the torque values shown in table 8. Remove all excess lubricant after tightening.

7. Lubricate (key 54) the threads on the valve body and hammer nut and the contact surfaces of the bonnet and hammer nut flange. Install the bonnet and actuator assembly with pinned valve plug onto the valve body. Tighten the hammer nut using an adjustable wrench until the nut stops turning. A few hammer blows will be required to ensure that the assembly is tight.

8. See the actuator assembly and spring adjustment sections of this manual.

Valve Packing

Note

These instructions apply to valves manufactured with serial numbers equal to and greater than 18679262. See Appendix A for information on packing constructions with serial numbers less than 18679262.

If your D4 valve assembly has a packing retainer lock ring (see figure 6), proceed to Appendix A.

WARNING

Observe the warning at the start of the Maintenance section.

The valve stem packing can only be accessed from within the valve body. If packing maintenance is required, first disassemble per steps 1, 2, and 6 or 7 in the Valve Plug and Seat Ring Disassembly section of this document.

Disassembly

1. Unscrew the packing retainer (key 10) from the bonnet (key 5).

2. Remove the five Belleville springs (key 11), packing spacer (key 14), packing (key 13), and two anti-extrusion rings (key 12) from the bonnet, using a formed wire hook.

3. Clean and inspect the packing box wall to ensure that the packing surfaces are not damaged. If the surface condition is damaged, and cannot be improved by light sanding, replace the bonnet by contacting your Emerson Process Management sales office.

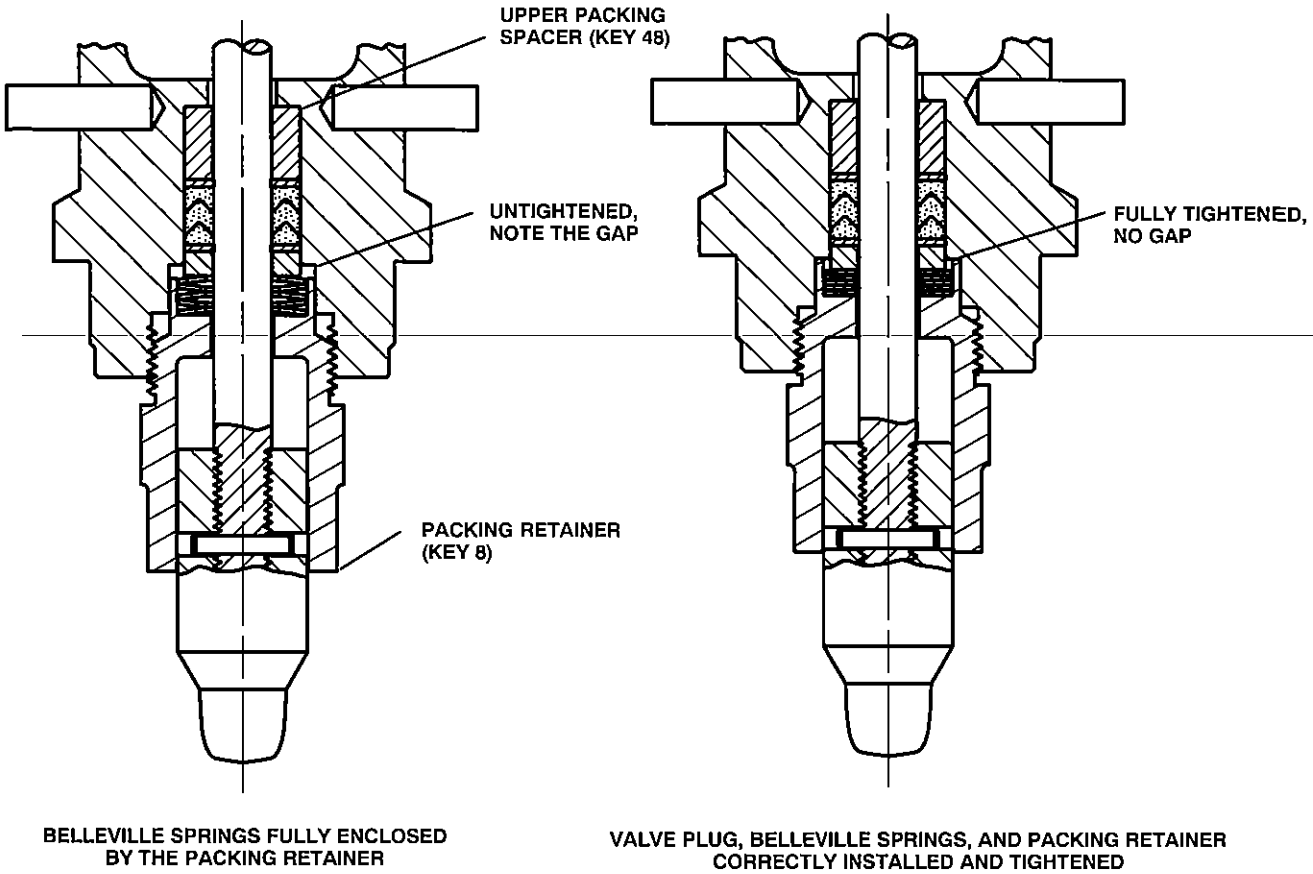

Figure 2. Fisher® D4 Packing Installation

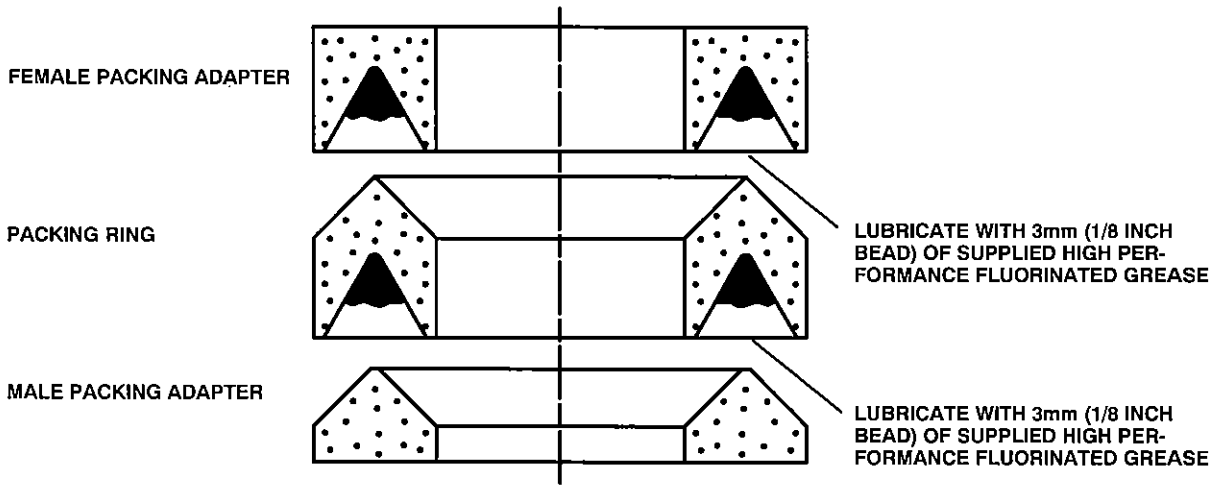

Figure 3. Lubrication Locations on Packing

4. Inspect the valve stem for scratches or wear, and valve plug for wear or damage. Replace if necessary.

Assembly

Refer to figures 2, 3, 4, and 5.

Note

If your D4 valve assembly has a packing retainer lock ring (see figure 6), proceed to Appendix A.

1. Ensure the upper packing spacer (key 48) is installed, as shown in figure 2.

2. Using a non-marring installation tool, such as a 12-inch length of 1/2 inch PVC pipe, push the first anti-extrusion washer (key 12) fully into the packing box by hand. Then, use the packing spacer (key 14) to fully seat the anti-extrusion washer by firmly tapping the packing spacer against the anti-extrusion washer with a hammer and the PVC pipe.

3. Remove the packing spacer from the packing bore.

CAUTION

All D4 packing kits include a single use packet of high performance fluorinated grease. This is the only acceptable D4 packing lubricant.

Note

In the following procedure, carefully install each packing ring individually over the valve stem and push completely into the packing box with a non-marring tube. A 12-inch length of 1/2 inch PVC pipe works well for this. It is recommended that the lubricated packing rings be installed individually rather than pushed in as a set.

4. Apply a 3mm (1/8 inch) bead of the supplied high performance fluorinated grease (key 44) around the groove of the female packing adaptor as shown in figure 3 and install over the valve stem (key 16).

5. Apply a 3mm (1/8 inch) bead of the supplied high performance fluorinated grease (key 44) around the groove of the packing ring as shown in figure 3 and install over the valve stem.

6. Install the male packing adaptor, lower anti-extrusion washer (key 10), and lower packing spacer over the valve stem as shown in figure 2.

7. Firmly press all packing parts into the packing bore with a tube.

8. Install the five belleville springs (key 11) over the valve stem. The belleville springs should be single-stacked with the inside diameter of the inner spring contacting the packing spacer (key 14), and the outside diameter of the outer spring contacting the packing retainer (key 10).

9. Lubricate the threads of the packing retainer with anti-seize and install into the bonnet using a 1-5/8 inch wrench. Make sure the Belleville springs are completely enclosed by the packing retainer as shown in figure 2.

10. Torque the packing retainer to 136 N•m (100 lbf•ft). The packing retainer has been installed correctly when a metal-to-metal contact has been made between the packing retainer end and the bonnet (key 5). The packing retainer threads should be completely enclosed by the bonnet.

Actuator (Spring-to-Close)

WARNING

Observe the warning at the start of the Maintenance section.

Refer to figure 4.

Before disassembling the actuator, disassemble the valve plug, seat ring, and packing according to instructions in this manual.

Disassembly

1. Loosen the adjusting screw nut (key 44) and turn the adjusting screw (key 31) counterclockwise to remove all spring compression.

2. Unscrew the casing cap screws and hex nuts (keys 45 and 46), and remove the upper casing assembly (key 23) from the lower casing (key 39).

3. Remove the spring seat (key 29) and actuator spring (key 30).

4. Lift out the diaphragm, diaphragm plate, and stem assembly. Remove the travel indicator (key 32) when the bottom of the stem enters the yoke window.

5. To replace the diaphragm (key 15), separate the diaphragm assembly by using a wrench on the hex nuts (key 42) to unscrew the assembly.

6. Separate the parts--diaphragm washer, actuator O-ring (keys 41 and 25), diaphragm, and diaphragm plate, (keys 15 and 40).

7. Inspect the diaphragm and the actuator O-ring for damage or deterioration, and replace if necessary. If the diaphragm is replaced, a new O-ring should also be installed.

8. Inspect the stem O-ring (key 19) and bonnet bushing (key 20); replace if necessary. To inspect the casing O-ring (key 18), remove the cap screws (key 38) and lift off the lower casing (key 39). Replace the O-ring if necessary.

9. If the hammer nut needs to be removed from the bonnet, the spring pins (key 7) can be removed with locking pliers.

Assembly

1. Before starting assembly, make sure all parts are clean and in good condition. There should be no burrs or sharp edges on any threads or surfaces that might cut or damage an O-ring, bushing, the packing, or the diaphragm. When replacing O-rings and bushings, be sure the O-ring or bushing groove is clean and undamaged. Using a general purpose lubricant (key 49), lubricate all bushings and O-rings and the threads of parts that have to pass through the bushings and O-rings.

CAUTION

The threads on factory-produced valve stems have been specially machined to avoid O-ring, bushing, or packing damage during trim maintenance. Use of other than a factory-produced valve stem may result in early stem O-ring, bushing, and packing failure.

Note

Do not lubricate cap screws (key 38) before inserting them in the following procedure.

2. Place the hammer nut and spring pins on the bonnet, if removed. Install the casing O-ring (key 18), the stem O-ring (key 19), and the bonnet bushing (key 20). Position the lower casing (key 39) on the bonnet. Insert the nonlubricated cap screws (key 38), and torque to 49 N•m (36 lbf•ft).

WARNING

The spring pins must always be in place during valve operation. They provide a safeguard against injury when the unit is being disassembled.

3. Assemble the diaphragm plate assembly. Place the patterned side of the diaphragm (key 15) against the diaphragm plate (key 40). Be sure to turn the diaphragm washer (key 41) so that the side that is beveled on the inside diameter is against the O-ring (key 25). Also, make sure that it is assembled for installation with the diaphragm on the loading pressure side and the lockwasher (key 43) and lower spring seat (key 28) are on the spring side.

4. Fasten the diaphragm and diaphragm plate assembly on the stem with hex nuts (key 42). Place the diaphragm and diaphragm plate, and stem assembly into the lower casing and bonnet. Install the travel indicator (key 32) on the stem as the bottom of the stem enters the yoke window.

CAUTION

Over-tightening the diaphragm casing cap screws and nuts (keys 45 and 46) can damage the diaphragm. Do not exceed 27 N•m (20 lbf•ft) torque.

5. Replace the spring (key 30) on the diaphragm plate (key 40). Replace the upper spring seat (key 29). Position the upper casing (key 23) on the lower casing (key 39). Insert the cap screws (key 45) and tighten the hex nuts (key 46). Torque the casing cap screws evenly to 27 N•m (20 lbf•ft) using a crisscross pattern.

6. Adjust the initial spring set per the Spring Adjustment section in this manual.

Actuator (Spring-to-Open)

WARNING

Observe the warning at the start of the Maintenance section.

Refer to figure 5.

Before disassembling the actuator, disassemble the valve plug, seat ring, and packing according to instructions in this manual.

Disassembly

1. Unscrew the spring case assembly (key 27). Turn the adjusting screw nut (key 44) counterclockwise to remove all spring compression. Remove the adjusting screw nut, upper spring seat, and spring (keys 44, 29, and 30)

2. Unscrew the casing cap screws and hex nuts (keys 45 and 46), and remove the upper casing assembly (key 23) from the lower casing (key 39). Remove the cotter pin (key 36) and unscrew the adjusting stem (key 31).

3. Lift out the diaphragm (key 15), diaphragm plate (key 40), and stem assembly. Remove the travel indicator (key 32) when the bottom of the stem enters the yoke window.

4. To replace the diaphragm (key 15), separate the diaphragm assembly by using a wrench on the hex nuts (key 42) to unscrew the assembly.

5. Separate the parts--diaphragm washer, actuator O-ring (keys 41 and 25), diaphragm, and diaphragm plate, (keys 15 and 40).

6. Inspect the diaphragm and the actuator O-ring for damage or deterioration, and replace if necessary. If the diaphragm is replaced, a new O-ring should also be installed.

7. Inspect the stem O-ring (key 19) and bonnet bushing (key 20); replace if necessary. To inspect the casing O-ring (key 18), remove the cap screws (key 38) and lift off the lower casing (key 39). Replace the O-ring if necessary. Inspect the adjusting stem bushing (key 26) and actuator stem O-ring (key 53). Replace if necessary.

8. If the hammer nut needs to be removed from the bonnet, the spring pins (key 7) can be removed with locking pliers.

Assembly

1. Before starting assembly, make sure all parts are clean and in good condition. There should be no burrs or sharp edges on any threads or surfaces that might cut or damage an O-ring, bushing, the packing, or the diaphragm. When replacing O-rings and bushings, be sure the O-ring or bushing groove is clean and undamaged. Using a general purpose lubricant (key 49), lubricate all bushings and O-rings and the threads of parts that have to pass through the bushings and O-rings.

CAUTION

The threads on factory-produced valve stems have been specially machined to avoid O-ring, bushing, or packing damage during trim maintenance. Use of other than a factory-produced valve stem may result in early stem O-ring, bushing, and packing failure.

Note

Do not lubricate cap screws (key 38) before inserting them in the following procedure.

2. Place the hammer nut and spring pins on the bonnet, if removed. Install the casing O-ring (key 18), the stem O-ring (key 19), and the bonnet bushing (key 20). Position the lower casing (key 39) on the bonnet. Insert the nonlubricated cap screws (key 38), and torque to 49 N•m (36 lbf•ft).

3. Assemble the diaphragm plate assembly. Place the patterned side of the diaphragm (key 15) against the diaphragm plate (key 40). Be sure to turn the diaphragm washer (key 41) so that the side that is beveled on the inside diameter is against the O-ring (key 25). Also, make sure that it is assembled for installation with the diaphragm on the loading pressure side and the lockwasher (key 43) and diaphragm washer (key 41) are on the upper side.

WARNING

The spring pins must always be in place during valve operation. They provide a safeguard against injury when the unit is being disassembled.

4. Fasten the diaphragm and diaphragm plate assembly on the stem with hex nuts (key 42). Place the diaphragm and diaphragm plate, and stem assembly into the lower casing and bonnet. Install the travel indicator (key 32) on the stem as the bottom of the stem enters the yoke window.

5. Screw the adjusting stem (key 31) onto the stem (key 47) and secure the cotter pin (key 36). Make sure the bushing and O-ring are in place in the upper casing.

CAUTION

Over-tightening the diaphragm casing cap screws and nuts (keys 45 and 46)

can damage the diaphragm. Do not exceed 27 N•m (20 lbf•ft) torque.

6. Position the upper casing (key 23) on the lower casing (key 39). Insert the cap screws (key 45) and tighten the hex nuts (key 46). Torque the casing cap screws evenly to 27 N•m (20 lbf•ft) using a crisscross pattern.

7. Replace the spring (key 30), spring seat (key 29), and adjusting stem nut (key 44) over the adjusting stem. Replace the spring case assembly (key 27).

8. Adjust the initial spring set per the Spring Adjustment section in this manual.

Parts Ordering

Each D4 control valve is assigned a serial number, which can be found on the nameplate. Refer to the number when contacting your Emerson Process Management sales office for assistance or when ordering replacement parts.

WARNING

Use only genuine Fisher replacement parts. Components that are not supplied by Emerson Process Management should not, under any circumstances, be used in any Fisher valve, because they may void your warranty, might adversely affect the performance of the valve, and could cause personal injury and property damage.

Note

Neither Emerson, Emerson Process Management, nor any of their affiliated entities assumes responsibility for the selection, use, or maintenance of any product. Responsibility for the selection, use, and maintenance of any product remains with the purchaser and end-user.

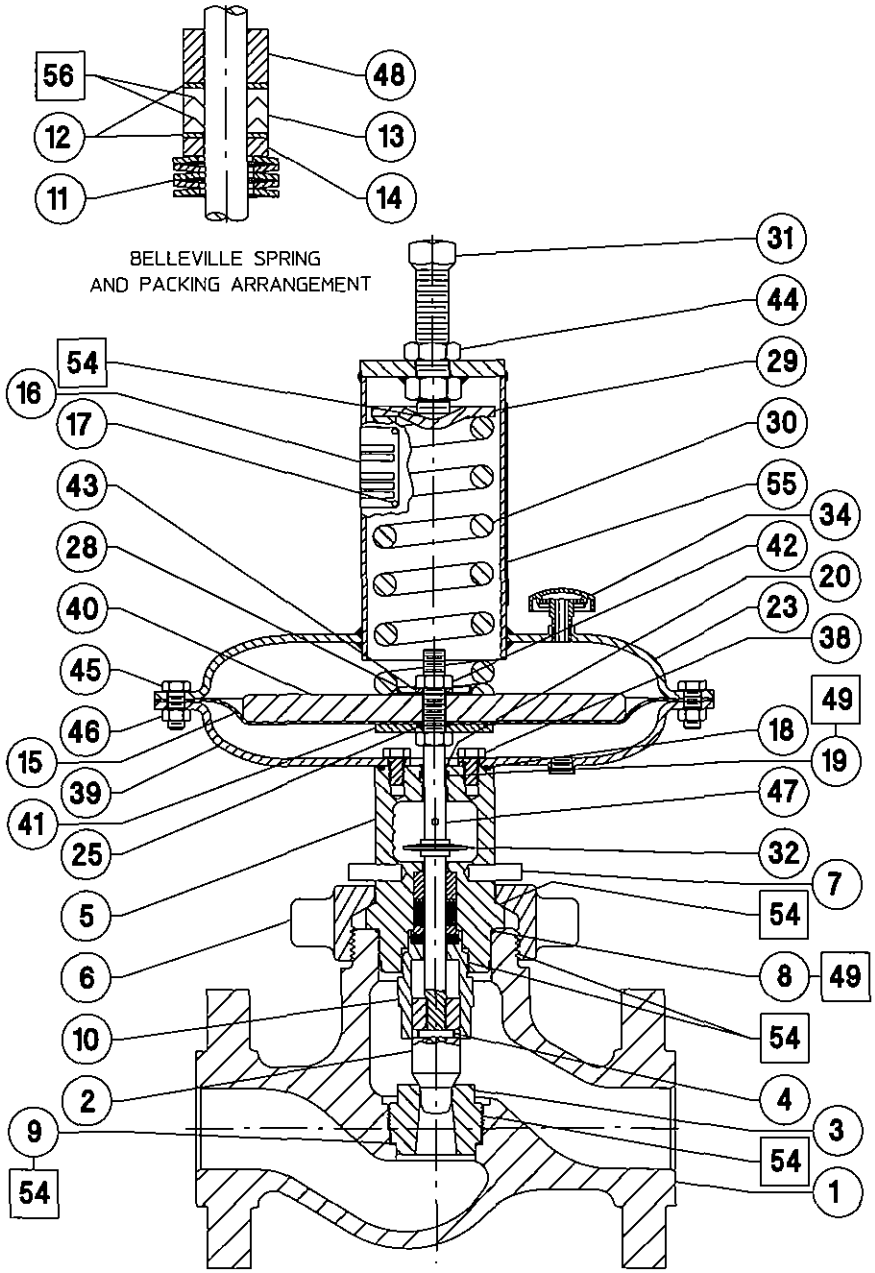

Figure 4. Fisher® D4 Valve Assembly (Spring-to-Close)

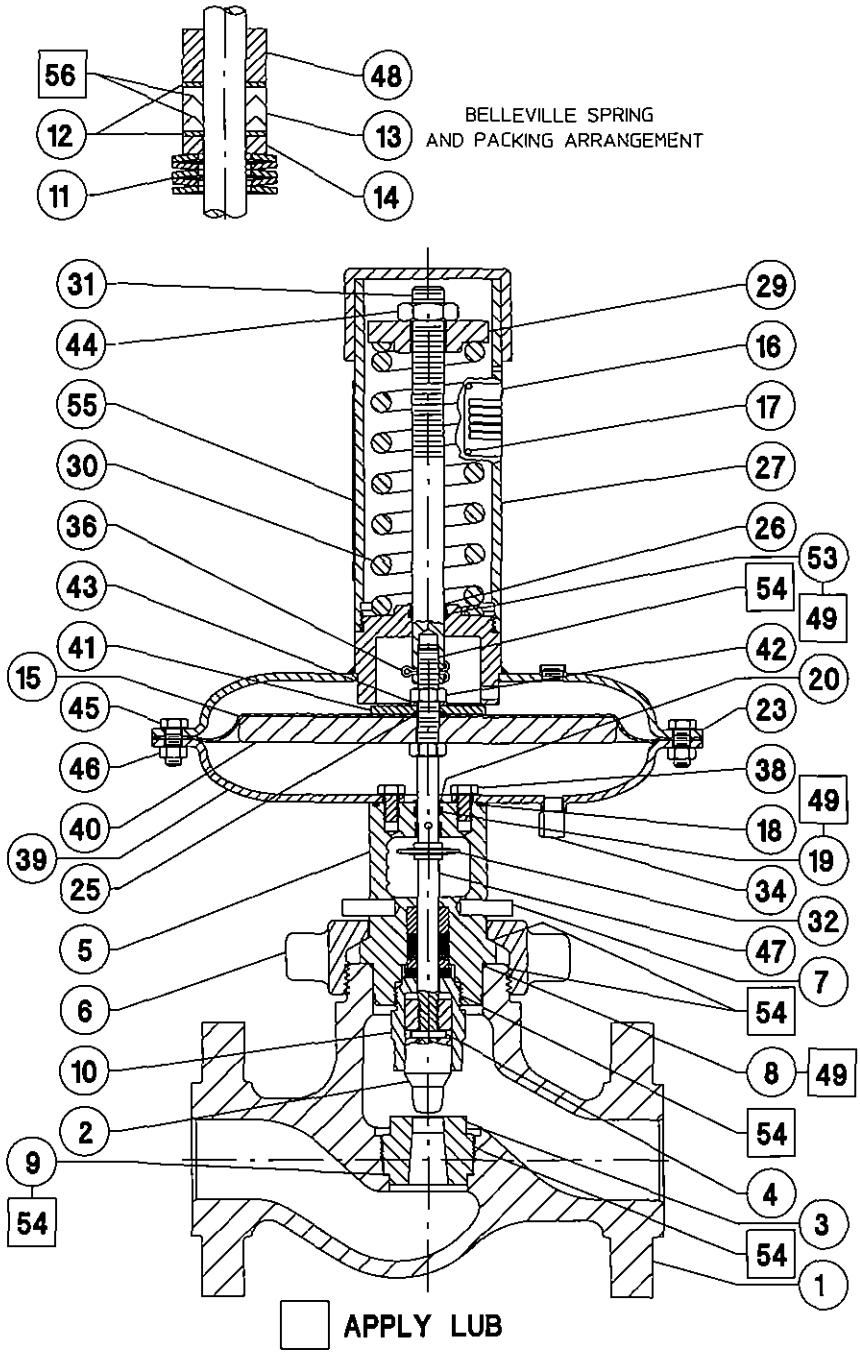

Figure 5. Fisher® D4 Valve Assembly (Spring-to-Open)

Repair Kits

Note

All repair kits are supplied with hydrogenated nitrile bonnet O-ring. FKM (fluorocarbon) bonnet O-ring must be ordered separately when required.

	Description	Part Number
*	Packing Repair Kit Includes key numbers 4, 8, 12 (2 req'd), 13, and high performance fluorinated grease	RD4X0000012
*	Actuator Repair Kit Includes key numbers 4, 8, 12 (2 req'd), 13, 15, 18, 19, 20, 25, 26, 36, 53, and high performance fluorinated grease	RD4X0000022

Parts List

Note

For part numbers not shown, contact your Emerson Process Management sales office.

Key	Description	Part Number
1	Valve Body	
2*	Valve Plug	
	S41000 / S41600 HT	
	NPS 1 valve	
	0.25 inch port diameter	20C3692X012
	0.375 inch port diameter	20C3693X012
	0.5 inch port diameter	20C3694X012
	0.75 inch port diameter	GE01557X012
	NPS 2 valve	
	0.25 inch port diameter	GE00992X012
	0.375 inch port diameter	GE00993X012
	0.5 inch port diameter	GE00994X012
	0.75 inch port diameter	GE01558X012
	1-inch port diameter	GE01561X012
	1.25 inch port diameter	GE01555X012
	S17400 H1150 Dbl	
	NPS 1 valve	
	0.25 inch port diameter	20C3692X032
	0.375 inch port diameter	20C3693X032
	0.5 inch port diameter	20C3694X032
	0.75 inch port diameter	GE01557X032
	NPS 2 valve	
	0.25 inch port diameter	GE00992X032
	0.375 inch port diameter	GE00993X032
	0.5 inch port diameter	GE00994X032
	0.75 inch port diameter	GE01558X032
	1-inch port diameter	GE01561X032
	1.25 inch port diameter	GE01555X032
	Tungsten Carbide	
	NPS 1 valve	
	0.25 inch port diameter	20C3696X012
	0.375 inch port diameter	20C3697X012
	0.5 inch port diameter	20C3698X012
	0.75 inch port diameter	20C3699X012
	NPS 2 valve	
	0.25 inch port diameter	20C3682X012
	0.375 inch port diameter	20C3683X012
	0.5 inch port diameter	20C3685X012
	0.75 inch port diameter	20C3686X012
	1-inch port diameter	20C3687X012
	1.25 inch port diameter	20C3688X012
3*	Seat Ring	
	S17400 H1150 Dbl	
	NPS 1 valve	
	0.25 inch port diameter	GE00982XO32
	0.375 inch port diameter	GE00983XO32
	0.5 inch port diameter	GE00984XO32
	0.75 inch port diameter	GE00985XO32
	NPS 2 valve	
	0.25 inch port diameter	GE00986XO32
	0.375 inch port diameter	GE00987XO32
	0.5 inch port diameter	GE00988XO32
	0.75 inch port diameter	GE00989XO32
	1-inch port diameter	GE00990XO32
	1.25 inch port diameter	GE00991XO32
	Tungsten Carbide	
	NPS 1 valve	
	0.25 inch port diameter	GE07347XO12
	0.375 inch port diameter	GE07363XO12
	0.5 inch port diameter	GE07364XO12
	0.75 inch port diameter	GE07365XO12
	NPS 2 valve	
	0.25 inch port diameter	GE07389XO12
	0.375 inch port diameter	GE07394XO12
	0.5 inch port diameter	GE07397XO12
	0.75 inch port diameter	GE07398XO12
	1-inch port diameter	GE07399XO12
	1.25 inch port diameter	GE07406XO12
4*	Groove Pin	GE01163XO12
5	Bonnet	
6	Hammer Nut	
7	Spring Pin	
8*	Bonnet O-ring	
	Hydrogenated Nitrile	
	-46 to 149°C (-50 to 300°F)	10C3680X012
	FKM, -23 to 204°C (-10 to 400°F)	10C3680X022
9*	Seat Ring Gasket	
	For NPS 1 valve	1B198636042
	For NPS 2 valve	1B198836042
10	Packing Retainer	
11	Belleville Springs, 5 req'd	
12*	Anti-Extrusion Washer, 2 req'd	12B6335X022
13*	Packing Set	12B6667X012
14	Packing Spacer	
15*	Diaphragm	22B3521X012
16	Nameplate	
17	Drive Screw	
18*	Casing O-ring	1F9141X0142
19*	Stem O-ring	1K7561X0072
20*	Bonnet Bushing	17A7112X012
23	Upper Casing Assembly	
25*	Actuator O-ring	1K7561X0072
26*	Adjusting Stem Bushing (spring-to-open only)	17A4059X012
27	Spring Case Assembly	
28	Lower Spring Seat	
29	Upper Spring Seat	
30	Spring	
	Spring-to-Close, Light Rate	1F176827092
	Spring-to-Close, Heavy Rate	1E792427082
	Spring-to-Open, Light Rate	1F176727032
	Spring-to-Open, Heavy Rate	1F714327092
31	Adjustment Screw or Stem	
32	Travel Indicator	
34	Vent Assembly	

*Recommended spare parts

Key	Description	Part Number
36*	Cotter Pin (spring-to-open only)	1C608035022
37	Pipe Plug	
38	Cap Screw	
39	Lower Casing	
40	Diaphragm Plate	
41	Diaphragm Washer	
42	Hex Nut	
43	Lockwasher	
44	Adjustment Screw Nut	
45	Cap Screw	
46	Hex Nut	
47*	Valve Stem	
	S20910, Reverse Acting	20C3681X022
	S20910, Direct Acting	20C3716X022
48	Upper packing spacer	
49	Lubricant (lithium grease)	
51	Drive Screw	
53*	Actuator Stem O-ring (spring-to-open only)	1C7821X0182
54	Lubricant (anti-seize)	
55	Spring Setting Label (not shown)	
56	High Performance Fluorinated Grease Packing Lubricant	

*Recommended spare parts

Appendix A

Note

These instructions apply to valves manufactured with serial numbers less than 18679262.

Valve Packing

WARNING

Observe the warning at the start of the Maintenance section.

The valve stem packing can only be accessed from within the valve body. If packing maintenance is required, first disassemble per steps 1, 2, and 6 or 7 in the Valve Plug and Seat Ring Disassembly section of this document.

Disassembly

1. Loosen the packing retainer locknut (key 22) with a spanner wrench or with a punch and hammer.

2. Unscrew the packing retainer (key 10) from the bonnet (key 5).

3. Remove the three Belleville springs (key 11), packing spacer (key 14), packing (key 13), and two anti-extrusion rings (key 12) from the bonnet, using a formed wire hook.

4. Clean and inspect the packing box wall to ensure that the packing surfaces are not damaged. If the surface condition is damaged, and cannot be improved by light sanding, replace the bonnet by contacting your Emerson Process Management sales office.

5. Inspect the valve stem for scratches or wear, and valve plug for wear or damage. Replace if necessary.

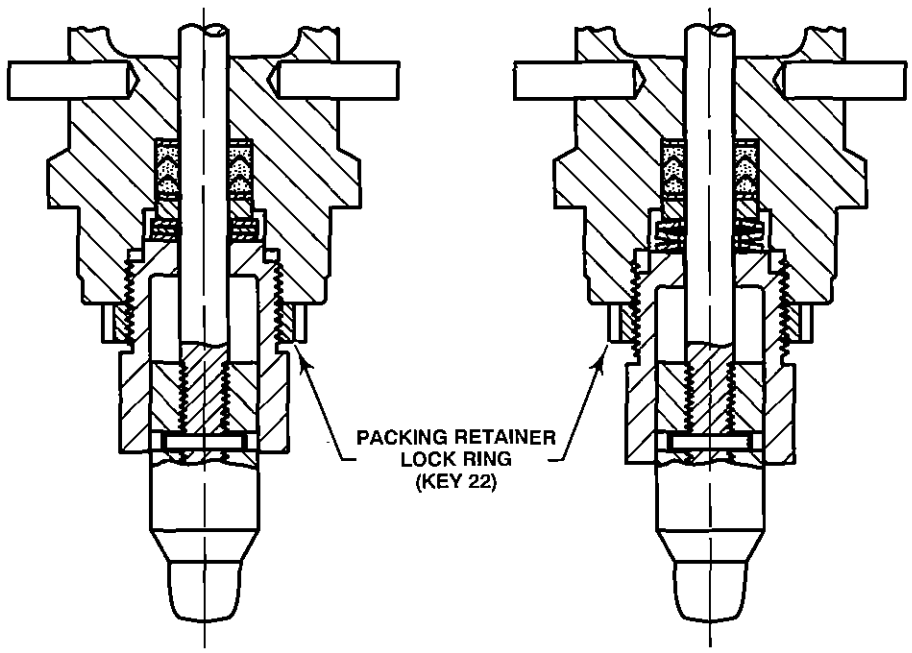

BONNET DESIGN FOR VALVES WITH SERIAL NUMBERS LESS THAN 18679262

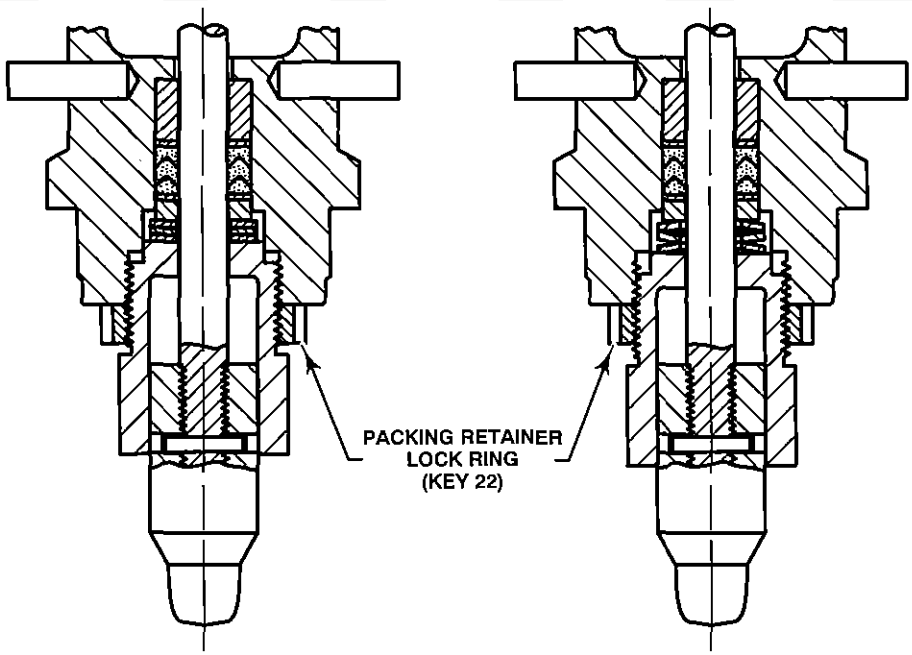

BONNET DESIGN FOR VALVES WITH SERIAL NUMBERS EQUAL TO OR GREATER THAN 18679262

NOTE: RECOMMENDED SPARE PARTS, INCLUDING PACKING KITS, ARE THE SAME FOR BOTH BONNET DESIGNS.

Figure 6. Fisher® D4 Belleville Spring Procedure

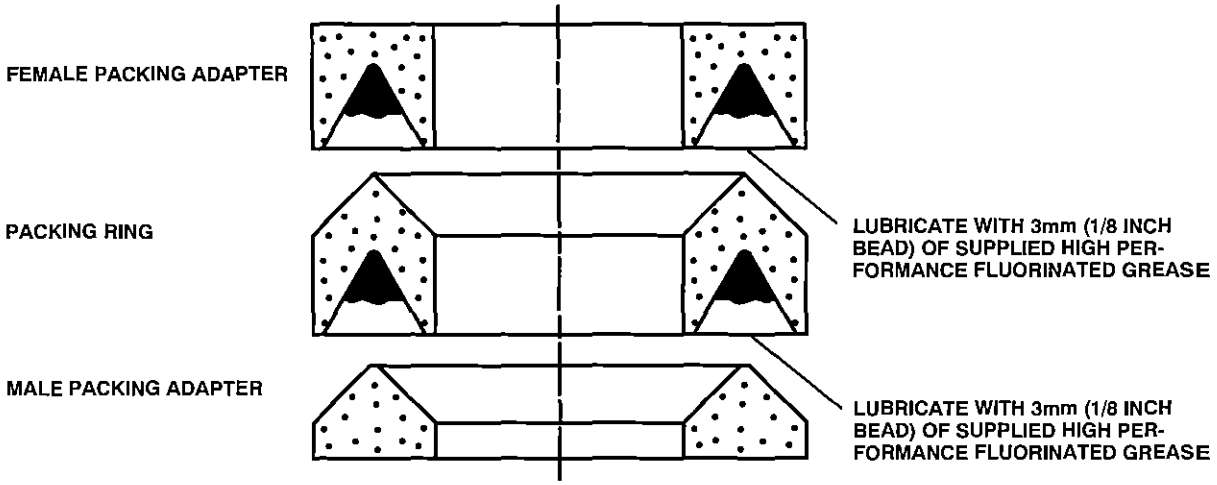

Figure 7. Lubrication Locations on Packing

Assembly

Refer to figures 6 and 7.

1. Install new packing and Belleville springs according to the packing arrangement shown in figure 6.

2. Using a non-marring installation tool, such as a 12-inch length of 1/2 inch PVC pipe, push the first anti-extrusion washer (key 12) fully into the packing box by hand. Then, use the packing spacer (key 14) to fully seat the anti-extrusion washer by firmly tapping the packing spacer against the anti-extrusion washer with a hammer and the PVC pipe.

3. Remove the packing spacer from the packing bore.

CAUTION

All D4 packing kits include a single use packet of high performance fluorinated grease. This is the only acceptable D4 packing lubricant.

Note

In the following procedure, carefully install each packing ring individually over the valve stem and push completely into the packing box with a non-marring tube. A 12-inch length of 1/2 inch PVC pipe works well for this. It is recommended that the lubricated packing rings be installed individually rather than pushed in as a set.

4. Apply a 3mm (1/8 inch) bead of the supplied high performance fluorinated grease (key 44) around the groove of the female packing adaptor as shown in figure 7 and install over the valve stem (key 16).

5. Apply a 3mm (1/8 inch) bead of the supplied high performance fluorinated grease (key 44) around the groove of the packing ring as shown in figure 7 and install over the valve stem.

6. Install the male packing adaptor, lower anti-extrusion washer (key 10), and lower packing spacer over the valve stem as shown in figure 6.

7. Firmly press all packing parts into the packing bore with a tube.

8. Install the Belleville springs (key 11). The Belleville springs (key 11) should be single stacked with the I.D. of the inner spring contacting the packing spacer (key 14) and the O.D. of the outer spring contacting the packing retainer (key 10). The final Belleville spring should be within the 1.26 inch diameter bore of the bonnet.

9. Adjust the packing retainer by hand until it makes contact with the Belleville springs. Do not tighten by hand, simply install the packing retainer until it makes contact with the Belleville springs. Tighten the packing retainer clockwise precisely 1.16 turns (7 flats on the retainer) to seat the packing. This should fully compress the Belleville springs as detected by an increase in torque between 6 and 7 flats.

10. Loosen the packing retainer completely. Adjust the packing retainer by hand until it makes contact with the Belleville springs. Do not tighten by hand, simply install the packing retainer until it makes contact with the Belleville springs. Tighten the packing retainer clockwise precisely 1/2 turn (3 flats on the retainer).

11. Lock the packing retainer (key 10) solidly in place by tightening the packing retainer locknut (key 22) using a spanner wrench or a hammer and punch or chisel.

Fisher is a mark owned by one of the companies in the Emerson Process Management business division of Emerson Electric Co. Emerson Process Management, Emerson, and the Emerson logo are trademarks and service marks of Emerson Electric Co. All other marks are the property of their respective owners. This product is covered by one or more of the following patents: 6,953,182 and 6,991,218 or under pending patents.

The contents of this publication are presented for informational purposes only, and while every effort has been made to ensure their accuracy, they are not to be construed as warranties or guarantees, express or implied, regarding the products or services described herein or their use or applicability. All sales are governed by our terms and conditions, which are available upon request. We reserve the right to modify or improve the designs or specifications of such products at any time without notice. Neither Emerson, Emerson Process Management, nor any of their affiliated entities assumes responsibility for the selection, use or maintenance of any product. Responsibility for proper selection, use, and maintenance of any product remains solely with the purchaser and end-user.

Emerson Process Management
Marshalltown, Iowa 50158 USA
Sorocaba, 18087 Brazil
Chatham, Kent ME4 4QZ UK
Dubai, United Arab Emirates
Singapore 128461 Singapore
www.Fisher.com

©Fisher Controls International LLC 2002, 2009; All Rights Reserved

EMERSON
Process Management

Please read and save these instructions. Read carefully before attempting to assemble, install, operate or maintain the product described. Protect yourself and others by observing all safety information. Failure to comply with instructions could result in personal injury and/or property damage! Retain instructions for future reference.

Speedaire® Stationary ASME Code Air Tanks

For Warranty & Service
1-888-606-5587
For Repair Parts
1-800-323-0620
Do Not Return To Branch

ENGLISH

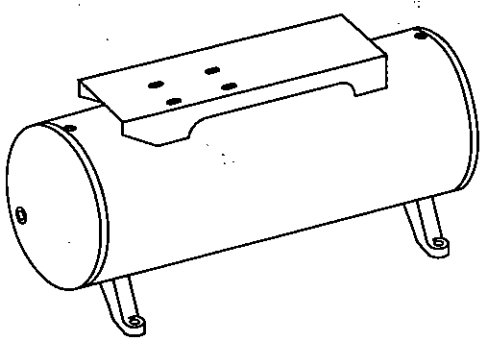

Description

These air tanks are designed to be used as air receivers. The tanks are designed for a maximum 200 PSI. Motor slots are punched into the baseplates for the size motors listed (The 120 gallon vertical tank does not include a base plate). Model 1VW39 is suitable as a replacement tank for Speedaire gas engine air compressors 5F564 and 4LW38.

Unpacking

When unpacking the tank, inspect carefully for any damage that may have occurred during transit. Make sure any loose fittings, bolts, etc., are tightened before putting tank into service. If tank is to be stored for a short period of time, make sure that it is stored in a normal position and in a cool, protected area.

General Safety Information

1. Read the instruction manual for each component carefully before assembling, disassembling or operating your system.
2. Do not exceed the pressure rating of any component in the system.
3. Release all pressures within the system before attempting to service any component.
4. Follow all local electrical and safety codes, as well as the National Electrical Code (NEC) and the Occupational Safety and Health Act (OSHA) in the United States.
5. All moving parts should be guarded.
6. Make certain that the power source conforms to the requirements of the equipment.
7. Wiping or cleaning rags and other flammable waste materials must be placed in a tightly closed metal container and disposed of later in the proper fashion.
8. Be sure the regulated output pressure is set at zero before attempting to connect any device such as an air tool. Excessive pressure can damage some tools.

Installation

⚠DANGER ***A 200 PSI maximum pressure ASME approved safety valve with appropriate flow rating must be installed in the tank before use. We recommend using Model 5A716.***

1. Tank should be bolted to a concrete floor or on a separate concrete foundation. Vibration isolators should be used between the tank legs and the floor. Isolator pads (Model 4C974) are recommended. Air compressor should be mounted on a flat, even surface.

Specifications

Model	Gal.	Type	Max. Compressor HP	Motor Slots NEMA Frame	Max.Gas Eng.HP	No. of Legs	Leveling Req.
1VW39	30	Horiz.	7.5 HP, 2 Stage	—	13 HP	4	Yes
5Z359A	30	Horiz.	5 HP, 1 Stage & 2 HP, 2 Stage	56, 56H, & 56HZ	5 HP	4	Yes
5Z363A	30	Vert.	5 HP, 1 Stage & 2 HP, 2 Stage	56, 56H, & 56HZ	None	3	No
5Z360A	60	Horiz.	5 HP, 2 Stage	56, 56H, 56HZ, 145T & 184T	None	4	Yes
5Z364A	60	Vert.	5 HP, 2 Stage	56, 56H, 56HZ, 145T & 184T	None	3	No
5Z365A	80	Vert.	7.5 HP, 2 Stage	145T & 184T	None	3	No
5Z361A	80	Horiz.	10 HP, 2 Stage	145T, 184T, & 215T	None	4	Yes
5Z362A	120	Horiz.	10 HP, 2 Stage	184T & 215T	None	4	Yes
4KP88	120	Vert.	-	-	-	3	Yes

Form 5S3143 Printed in U.S.A. 02433 1101/216/VCPVP IN174304AV 12/01

SPEEDAIRE®

Speedaire® Stationary ASME Code Air Tanks

ENGLISH

Installation (Continued)

NOTE: When using isolator pads, do not draw bolts tight. Allow pads to absorb vibrations.

IMPORTANT: When isolators are used, a flexible coupling should be installed between tank and service piping. When using 4KP88, a flexible coupling should also be installed between the air compressor and the air receiver.

⚠CAUTION ***Never use wooden shipping skid(s) as vibration isolators.***

⚠CAUTION ***Unsecured tanks can result in electrical hazard and fire due to electrical supply cable becoming disconnected.***

⚠WARNING ***Never drill or weld the pressurized part of air tanks.***

2. When equipment is installed on the tank, always provide appropriate belt guard and shields to prevent contact with moving or hot parts.
3. Do not weld or modify the pressurized part of the tank. It is allowable to drill holes in the base-plate only for the purpose of mounting the pump or guards.

⚠WARNING ***No other product alteration or modification is advised.***

REMOVAL OF INSPECTION PLUG

To remove the ASME Inspection Plug from 30 gallon tanks, use a wrench with a jaw opening of 2 1/8". To remove the ASME Inspection Plug from 60, 80 and 120 gallon tanks, use a wrench with a jaw opening of 2 9/16". Turn counterclockwise.

INSTALLATION OF ASME INSPECTION PLUG

To install the ASME Inspection Plug on 30 gallon tanks, use a wrench with a jaw opening of 2 1/8". To install the ASME Inspection Plug on 60, 80 and 120 gallon tanks, use a wrench with a jaw opening of 2 9/16". Be sure the O-Ring on the ASME Inspection Plug is present and in place. Torque (clockwise) the plug from 42 ft. lbs. minimum to 100 ft. lbs. maximum.

⚠WARNING ***Failure to comply with these guidelines can result in personal injury and/or property damage due to tank failure.***

Operation

⚠CAUTION

- ***These tanks are designed and intended to be used as air receivers only.***
- ***Do not exceed maximum allowable compressor and motor size. See Specifications.***
- ***Maximum pressure of tank should not exceed 200 PSI.***

Maintenance

⚠WARNING ***Drain moisture from tank daily. Failure to drain tank can result in weakening due to rust and bursting.***

Cal - OSHA code 462 (L) (2) listings

Tank Model No.	Gallons/ Type		Compatible Single Stage Pump	RPM	Compatible Two Stage Pump	RPM
5Z359A	30	Horiz.	1Z944	745	-	-
			1Z945	710	-	-
			3Z170	660	-	-
			2Z498	930	-	-
			2Z499	750	-	-
			2Z630	750	-	-
			2Z870	1750	-	-
			4Z460	1750	-	-
			4B244	1000	-	-
			4B245	1000	-	-
			4B246	1000	-	-
			4B247	1000	-	-
			3Z897	820	-	-
5Z363A	30	Vert.	2Z498	750	-	-
			2Z499	750	-	-
			2Z630	900	-	-
			3Z897	820	-	-
			4B244	1000	-	-
			4B245	1000	-	-
			4B246	1000	-	-
			4B247	1000	-	-

Models 1VW39, 5Z359A thru 5Z365A & 4KP88

Cal - OSHA code 462 (L) (2) listings (Continued)

Tank Model No.	Gallons/ Type		Compatible Single Stage Pump	RPM	Compatible Two Stage Pump	RPM
5Z360A	60	Horiz.	-	-	3Z181	700
			-	-	3Z180	700
			-	-	3Z492	700
			-	-	3Z960	875
			3Z898	1135	-	-
			-	-	5Z404	700
			-	-	5F235	700
5Z364A	60	Vert.	2Z499	750	-	-
			2Z630	935	-	-
			3Z897	820	-	-
			3Z898	1135	-	-
			-	-	5Z404	700
			-	-	5F235	700
			4B244	1100	-	-
			4B245	1100	-	-
			4B246	1100	-	-
			4B247	1100	-	-
5Z365A	80	Vert.	3Z898	1135	-	-
			-	-	3Z492	700
			-	-	5Z404	700
			-	-	5F235	700
			-	-	5F566	1000
			-	-	3Z180	700
			-	-	3Z181	700
			-	-	3Z960	875
5Z361A	80	Horiz.	-	-	3Z181	700
			-	-	3Z180	700
			-	-	5Z404	700
			-	-	3Z960	875
			3Z898	1135	-	-
			-	-	5Z405	700
			-	-	3Z182	700
			-	-	3Z183	700
			-	-	5F566	1000
5Z362A	120	Horiz.	2Z498	750	-	-
			2Z499	750	-	-
			2Z630	900	-	-
			3Z897	820	-	-
			-	-	5Z405	700
			-	-	5F236	700
4KP88	120	Vert.				
1VW39	30	Horiz.	-	-	5F566	1100

ENGLISH

For Repair Parts, call 1-800-323-0620

24 hours a day - 365 days a year

Please provide following information:
- Model number
- Serial number (if any)
- Part description and number as shown in parts list

Address parts correspondence to:
Grainger Parts Operations
P.O. Box 3074
1657 Shermer Road
Northbrook, IL 60065-3074 U.S.A.

ENGLISH

Description	Model	Part Number
Replacement O-Ring on ASME Inspection Plug	5Z359A	ST070191AV
	5Z363A	ST070191AV
	5Z360A	ST070190AV
	5Z361A	ST070190AV
	5Z362A	ST070190AV
	5Z364A	ST070190AV
	5Z365A	ST070190AV
	4KP88	-
	1VW39	ST070191AV
Drain cock for all models	-	ST127700AV

Limited Warranty

Dayton One-Year Limited Warranty. *Speedaire® Stationary Air Tanks, Models covered in this manual, are warranted by Dayton Electric Mfg. Co. (Dayton) to the original user against defects in workmanship or materials under normal use for one year after date of purchase. Any part which is determined by Dayton to be defective in material or workmanship and returned to an authorized service location, as Dayton designates, shipping costs prepaid, will be, as the exclusive remedy, repaired or replaced at Dayton's option. For limited warranty claim procedures, see PROMPT DISPOSITION below. This limited warranty gives purchasers specified legal rights which vary from jurisdiction to jurisdiction.*

Limitation of Liability. *To the extent allowable under applicable law, Dayton's liability for consequential and incidental damages is expressly disclaimed. Dayton's liability in all events is limited to, and shall not exceed, the purchase price paid.*

Warranty Disclaimer. *Dayton has made a diligent effort to provide product information and illustrate the products in this literature accurately; however, such information and illustrations are for the sole purpose of identification, and do not express or imply a warranty that the products are merchantable, or fit for a particular purpose, or that the products will necessarily conform to the illustrations or descriptions.*

Except as provided below, no warranty or affirmation of fact, expressed or implied, other than as stated in "LIMITED WARRANTY" above is made or authorized by Dayton.

Product Suitability. *Many jurisdictions have codes and regulations governing sales, construction, installation, and/or use of products for certain purposes, which may vary from those in neighboring areas. While Dayton attempts to assure that its products comply with such codes, it cannot guarantee compliance, and cannot be responsible for how the product is installed or used. Before purchase and use of a product, review the product applications, and all applicable national and local codes and regulations, and be sure that the product, installation, and use will comply with them.*

Certain aspects of disclaimers are not applicable to consumer products e.g., (a) some jurisdictions do not allow the exclusion or limitation of incidental or consequential damages, so the above limitation or exclusion may not apply to you; (b) also, some jurisdictions do not allow limitations on how long an implied warranty lasts, consequently the above limitation may not apply to you; and (c) by law, during the period of the limited warranty, any implied warranties of implied merchantability or fitness for a particular purpose applicable to consumer products purchased by consumers, may not be excluded or otherwise disclaimed.

Prompt Disposition. *Dayton will make a good faith effort for prompt correction or other adjustment with respect to any product which proves to be defective within limited warranty. For any product believed to be defective within limited warranty, first write or call dealer from whom product was purchased. Dealer will give additional directions. If unable to resolve satisfactorily, write to Dayton at address below, giving dealer's name, address, date and number of dealer's invoice, and describing the nature of the defect. Title and risk of loss pass to buyer on delivery to common carrier. If product was damaged in transit to you, file claim with carrier.*

Manufactured for Dayton Electric Mfg. Co., 5959 W. Howard St., Niles, IL 60714 U.S.A.

Ruffneck™
Heaters for the Harshest Environments

ISO 9001:2000

Owner's Manual

FX5 Series

Electric Forced Air Heaters for Hazardous Locations

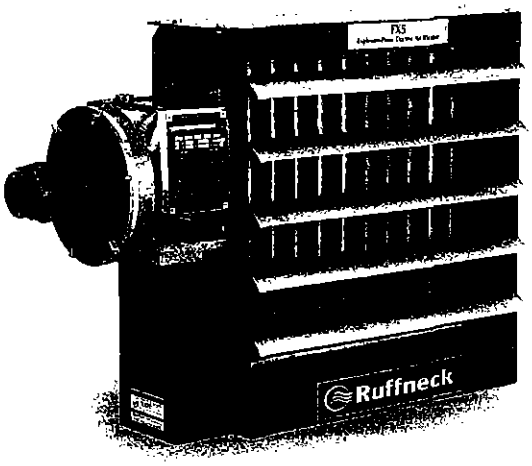

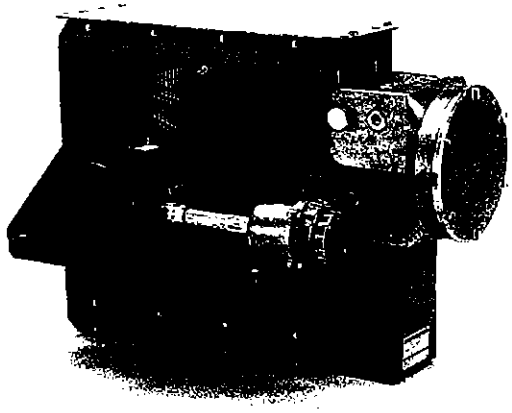

This manual covers the installation, maintenance, repair and replacement parts.

APPROVED LOCATIONS

The Electric Forced Air Heaters are cULus listed certified for the following locations:

Class I, Divisions 1 & 2, Groups C & D;
Class II, Division 1, Groups E, F, & G;
Class II, Division 2 , Groups F & G;
Class I, Zones 1 & 2, Groups IIA & IIB;
Temperature Code T3B 165°C (329°F)
(50 Hz & 60 Hz Models)

For details of hazardous locations with potential for explosion, refer to the Canadian Electrical Code, Part 1, Section 18 or National Electrical Code articles 500-516.

MODEL CODING

FX 5 - 4803 60 - 350

- 350 — KILOWATT RATING
- 60 — HERTZ
- 3 — PHASE
- 4803 — VOLTAGE
- 5 — 5th GENERATION
- FX — MODEL SERIES

WARNING!
READ ALL IMPORTANT NOTICES ON PAGE 3.

Part No. 9714-2

Printed in Canada

C UL US Listed

Ruffneck™ and VacuCore® are registered trademarks of CCI Thermal Technologies Inc.
Copyright© 2008. All rights reserved.

HEATER MAINTENANCE CHECKLIST

For Electric Forced Air Heaters

Photocopy this page for reuse.

Heater Model: _____ Serial No.: _____

Date of Maintenance: _____ Maintenance Done By: _____

Comments: _____

WARNING

Disconnect heater from power supply at integral disconnect or fuse box before opening enclosures or servicing heater.
Lock the switch in the "OFF" (open) position and/or tag the switch to prevent unexpected power application.
IF INTEGRAL DISCONNECT IS BEING SERVICED, verify that power has been disconnected at fuse box or main panel.
Lock the switch in the "OFF" (open) position and/or tag the switch to prevent unexpected power application.
This heater should only be serviced by personnel with heating and hazardous location equipment experience.

PERIODIC (before and as required during heating season)

1. CLEAN
   - ☐ Finned Tubes
   - ☐ Fan
   - ☐ Fan Guard
   - ☐ Motor
   - ☐ Louvers
2. CHECK
   - ☐ Motor for smooth, quiet operation
   - ☐ Louvers for proper angle and tightness
   - ☐ All explosion-proof covers for tightness
   - ☐ Pressure relief device for signs of leakage. See Figure 1 and refer to the ANNUAL Section (see below) item 2 for further instructions

Remove dust using compressed air. Do not spray with water or solvents.
Do not immerse in water or solvents.

ANNUAL (before heating season)

1. ELECTRICAL
   - ☐ **Check all terminal connections and conductors.** Tighten loose connections. Conductors with damaged insulation must be replaced.
   - ☐ **Inspect contactor contacts.** If badly pitted, burned or welded shut, replace with factory supplied contactor. For severe duty conditions such as arctic duty, CCI Thermal recommends the contactor be replaced every two years.
   - ☐ **Check fuses.** Fuse rating and type are on printed circuit board. Correct fuse must be in the active fuse clip. It is recommended that a spare fuse be stored in the spare fuse clip.
   - ☐ **Check all explosion-proof conduits.** Replace damaged conduits. All threaded conduit connections must have a minimum 5 turns engagement. Straight threaded conduit must protrude a minimum of 1/16" (1.6mm) inside enclosures. Taper threaded connections must be at least hand tight.
   - ☐ **Check electrical resistance on all load side legs.** Reading should be balanced (± 5%).
2. MECHANICAL
   - ☐ **Check for fluid leakage.** The heater core is vacuum charged and contains propylene glycol. Inspect the Pressure Relief Valve label indicator for signs of rupture and degradation. If the paper is torn, disintegrated or otherwise compromised this is an indication that fluid has leaked from the core. If any fluid leakage occurs from the heater, disconnect it from the power supply and have the core replaced. A factory supplied exchange core can be shipped immediately from stock. Refer to the "Repair and Replacement" section for details.
   - ☐ **Check all enclosures.** Interior of enclosures must be clean, dry and free of foreign materials. Threaded covers must be installed and hand tight.
     Note: Enclosure joints are metal to metal. Do not use gasket material or sealant in joints. A grease is applied to the joints at the factory and should be left intact.
   - ☐ **Check motor shaft bearing play.** Replace motor if play is excessive, or if motor does not run quietly and smoothly. Motor bearings are permanently lubricated.
   - ☐ **Check fan.** Replace immediately if cracked or damaged.
   - ☐ **Check louvers.** Louver screws should be tight. Louvers shall not be fully closed or override stops.

For assistance, please call
Toll Free: 1-800-661-8529 (24 hrs)
U.S. & Canada

Photocopy this page for reuse.

- ☐ **Check the tightness of all hardware.** All nuts and bolts, including mounting hardware, must be tight.
- ☐ **Turn heater on for a minimum of five minutes.** Check for warm air exiting heater through louvers. Crackling or pinging noises within heater during start-up are normal.

IMPORTANT NOTICES

WARNING

Read and adhere to the following. Failure to do so may result in severe or fatal injury.
WARRANTY WILL BE VOID

1. Read and follow all instructions in this manual.
2. Heater is to be used only in atmospheres having an ignition temperature higher than the heater's maximum rated operating temperature as shown on the heater data plate. Refer to applicable electrical codes for additional information.
3. Heater to be used only in the hazardous locations indicated on the heater's data plate.
4. Heater is for dry indoor use only. Do not immerse in water. Do not store or use in areas exposed to rain or snow.
5. Heater is to be connected and serviced only by a qualified electrician experienced with hazardous location equipment.
6. Installation and wiring of the heater must adhere to all applicable codes.
7. Disconnect heater from power supply at integral disconnect or fuse box before opening enclosures or servicing heater. Lock the switch in the "OFF" (open) position and/or tag the switch to prevent unexpected power application. IF INTEGRAL DISCONNECT IS BEING SERVICED, verify that power has been disconnected at fuse box or main panel. Lock the switch in the "OFF" (open) position and/or tag the switch to prevent unexpected power application.
8. This heater is equipped with a single bimetal overtemperature high-limit. It is of the automatic reset type and therefore the heater may restart without warning. The heater is not to be operated with the high-limit disabled or disconnected from the control circuit.
9. Venting pressure of the pressure relief valve is factory set. Do not tamper with lock nut.
10. Do not tamper or remove warning label indicator on the PRV.
11. Operate the heater only while it is permanently mounted in an upright position. Refer to the "Installation - Mechanical" section for details.
12. Heater must be kept clean. When operating in a dirty environment, regularly clean the finned tubes, fan, and fan guard. Follow the recommended maintenance procedures. Refer to the "Heater Maintenance Checklist" section for details.
13. The heater core is vacuum charged and contains propylene glycol. **If any fluid leakage occurs from the heater, disconnect it from the power supply and have the core replaced with a factory supplied core. Refer to the "Repair and Replacement" section for details.**
14. Do not operate the heater with any of the louvers fully closed or overriding their stops.
15. Do not operate the heater in atmospheres corrosive to steel or aluminum.
16. Do not operate heater in ambient temperatures above 40°C (104°F).
17. Use factory approved replacement parts only.
18. See applicable electrical codes for seal requirements in field installed conduits. Factory installed conduits require no further sealing.
19. Crackling or pinging noises within the heater core during start up may occur. This is normal.
20. Air discharge near the bottom of the heater may be warmer than the top. This is normal.
21. If there are any questions or concerns regarding the heater, contact the factory. Refer to the last page of this manual for details.

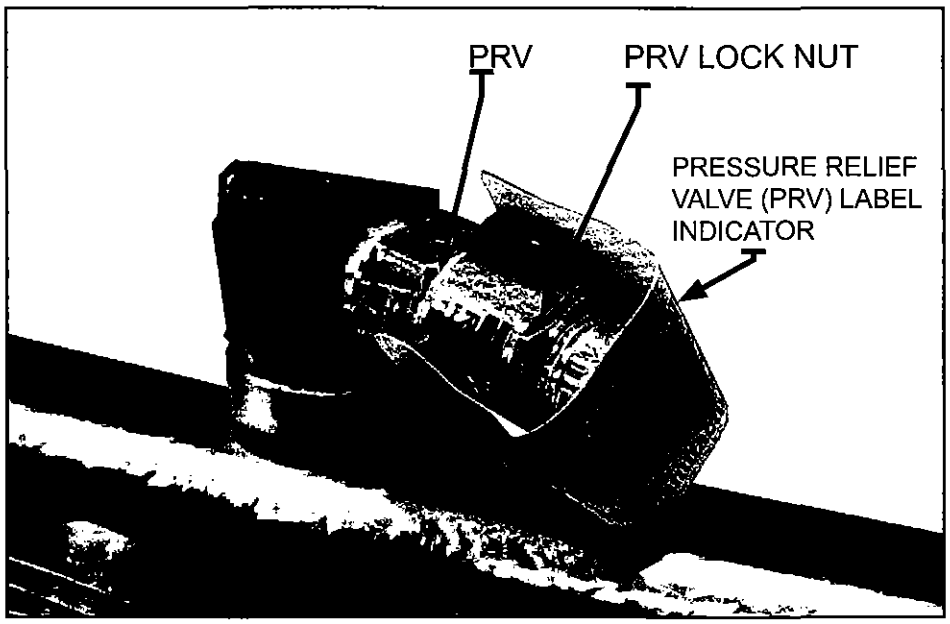

FIGURE 1

TROUBLESHOOTING TIPS

1.0 Heater is not operating

1.1 Check all fuses in heater control box.
1.2 Check remote disconnect switch and circuit breaker.
1.3 Check voltage supplied to the heater – refer to the heater data plate for voltage requirements.
1.4 Check thermostat by turning it and check continuity with a multimeter.
1.5 Check the condition of the disconnect switch if the heater is so equipped. Measure continuity through the disconnect by engaging the switch.
1.6 Verify that there is a jumper wire present between terminals 5 and 6 on the terminal block located in the control box.

2.0 Contactor is chattering

2.1 Check supply voltage.
2.2 Check wiring connections. Tighten all loose electrical connections.
2.3 Check thermostat for continuity (See 1.4). If thermostat does not break continuity replace thermostat.

3.0 Contactor is burned or welded

3.1 Check the contactor for burn marks and blackening. Replace the contactor.
3.2 Check incoming power to the heater to ensure there are no voltage fluctuations.

4.0 Heat exchanger is dirty

4.1 Clean the heat exchanger using compressed air.

5.0. PRV has released

5.1 If there are signs that the PRV has released fluid, PRV indicator is broken, blackening around the PRV exit hole, or there are fluid stains visible on the top louver, shut the unit down immediately.
5.2 Check for restricted air flow, bad motor, broken thermostat or malfunctioned high limit.

6.0 Heater is cold on top and warm on bottom

6.1 The core may have lost its vacuum. Check the PRV for signs of loss of fluid and verify that the PRV label indicator is not broken. If PRV has released, send the unit in for repair or replace the core.
6.2 If the PRV does not indicate loss of fluid, the heater should operate normally. Check for loss of fluid on a weekly basis as a minimum.
6.3 The ambient temperature may be too low. If the ambient temperature is very cold the top of the core will be colder than the bottom – this is normal.

7.0 Unit cycles on high limit – unit turns on and turns off within less than 5 minutes.

7.1 Check and see if the PRV has released fluid. Core may have lost most or all of its fluid. If PRV has released, send the unit in for repair or replace core.
7.2 The core may be dirty, fan may not be working or may be turning the wrong way (the fan must rotate clockwise as seen from the front of the unit) objects may be stuck in the heat exchanger for drying or warming up – remove any items from the exchanger.

8.0 The Ground Fault Interrupter (GFI) trips on the main panel, or heater blows fuses.

8.1 Check that you have a fuse of the proper amperage rating.
8.2 Check for loose or frayed wiring.
8.3 If condition is not observable, send heater in for repair.
8.4 Change sensitivity of GFI.

9.0 The fan is turning but very little air comes from the front of the heater.

9.1 Check fan rotation and ensure that the fan turns clockwise as seen from the front of the heater. Refer to the Installation section below for more information.
9.2 Check motor winding resistance and verify that they are balanced.
9.3 Check fan blade set screws to ensure fan blade is not loose on the motor shaft.

INSTALLATION

The installation instructions provide a general guideline for the installation and wiring of the heater. All applicable codes must be adhered to.

MECHANICAL

LOCATION

For optimum heating, the heater should be installed as follows:

1. There are no obstructions that may impede the heater's air inlet or discharge.
2. The air discharge is directed into open areas and not at occupants.
3. The air discharge is not directed at a thermostat.
4. The air discharge is directed across areas of heat loss, such as doors and windows (see Figure 2).
5. The air discharge is directed along and at a slight angle toward exterior walls (see Figure 2).
6. If equipment freeze protection is important, direct air discharge at equipment.
7. Air discharge streams support each other and create a circular air flow. It is not required that the heater's air throw reaches the next heater (see Figure 2).

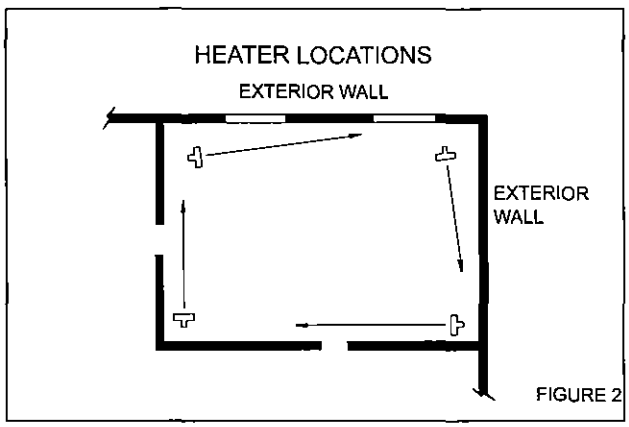

FIGURE 2

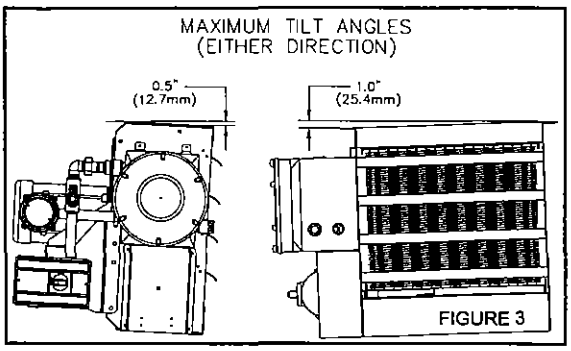

FIGURE 3

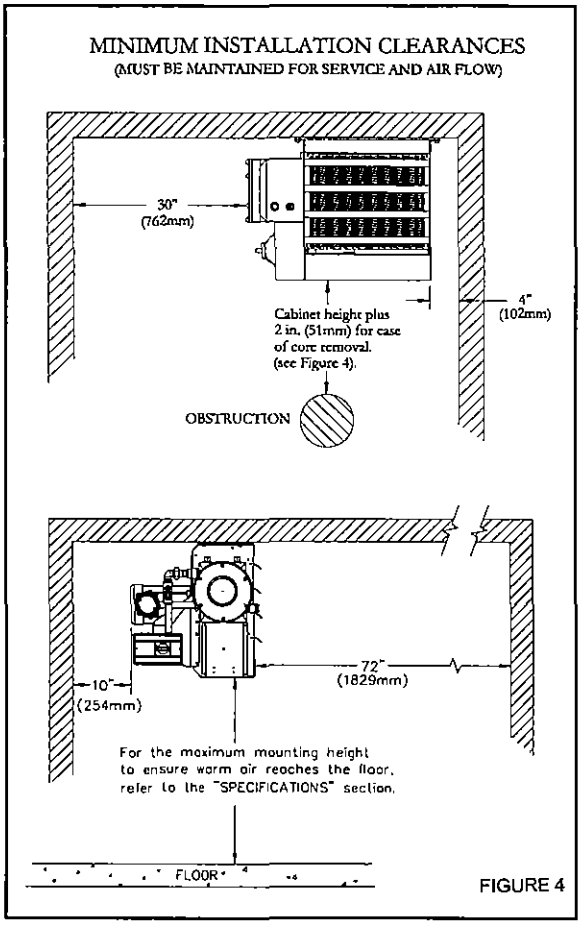

FIGURE 4

MOUNTING

1. The heater must be permanently mounted in a level, upright position for operation. See Figures 3, 4, and 5 for maximum tilt angles, installation clearances, and physical dimensions. For ease of installation, a variety of mounting kits are available from the factory.
2. The mounting structure must be strong enough to:
   a. support the heater's weight, refer to the "Specifications" section,
   b. provide sufficient stiffness to prevent excessive vibration, and
   c. withstand harsh situations such as transportable installations.

DIM.	kW	2.5–10	12.5–20	20.9–35	DIM. TOL. ±
A	in.	8–7/16	8–7/16	8–7/16	1/8
	mm	215	215	215	3
B	in.	18–3/16	22–5/16	26–1/4	1/8
	mm	462	566	667	3
C	in.	27	31	35	3/16
	mm	686	787	889	4
D	in.	18–1/2	22–1/2	26–1/2	1/8
	mm	470	572	674	3
E	in	19–7/16	23–7/16	27–7/16	3/8
	mm	494	596	697	10
F	in.	17–1/2	19–1/2	21–13/16	5/16
	mm	444	495	554	8

DIMENSIONAL TOLERANCES ±1/8" [±3mm]
UNLESS OTHERWISE SPECIFIED.

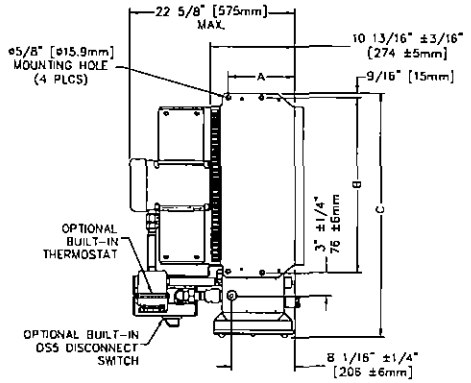

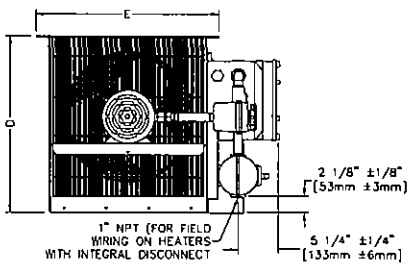

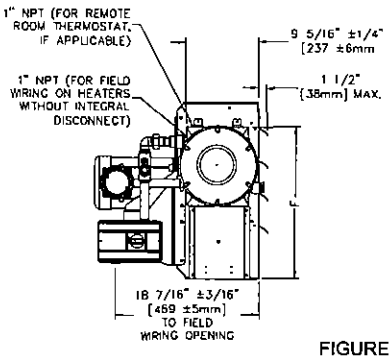

FIGURE 5

ELECTRICAL

WARNING

Disconnect heater from power supply at integral disconnect or fuse box before opening enclosures or servicing heater. Lock the switch in the "OFF" (open) position and/or tag the switch to prevent unexpected power application. IF INTEGRAL DISCONNECT IS BEING SERVICED, verify that power has been disconnected at fuse box or main panel. Lock the switch in the "OFF" (open) position and/or tag the switch to prevent unexpected power application. Installation and wiring of the heater must adhere to all application codes.

GENERAL

1. Use only copper conductors and approved explosion-proof wiring methods during installation. Refer to the "Technical Data" table and heater data plate for conductor rating.
2. External overcurrent protection is required. Refer to the "Technical Data" table and heater data plate for voltage, frequency amperage, and phase. Supply voltage is to be within 10% of the data plate voltage.
3. The heater must be installed by qualified personnel in strict compliance with electrical codes.
4. All heaters come factory prewired and ready for direct connection to the power supply leads.
5. The heater must be individually fused, preferably with Class J time-delay fuses for maximum safety. Unless stated otherwise in your local code, fuse size shall be 125% of line current or next size larger.

FIELD WIRING

1. The supply conductors, ground conductor, and room thermostat conductors (see point 2, page 5) all pass through the 1" NPT opening (see Figure 6) and are to be wired into the control enclosure (see Figure 7A).
2. Heater may be supplied with a factory installed built-in room thermostat (see Figure 8). On heaters not supplied with this option, it is recommended that a remote room thermostat be used. Connect the remote room thermostat conductors to the printed circuit board terminal block marked "TSTAT".
   Any thermostat used with this heater must:
   a. be of an explosion-proof type,
   b. be rated 125 V minimum,
   c. have a minimum 2 amp capacity, and
   d. open on temperature rise.

3. Heater may be supplied with a factory installed built-in integral disconnect. (See Figure 7B)

   Field Wiring for Integral Disconnect:

   a. Power Supply conductors and Ground conductor pass through 1"NPT opening of Disconnect Enclosure (see Figure 7B). Supply conductors to be wired to Disconnect Switch inside. Ground conductor to be wired to Ground Lug fastened to inside of Disconnect Enclosure.

   b. If applicable, Remote Room Thermostat conductors pass through 3/4"NPT opening (see Figure 7b) and are to be wired to printed circuit board terminals marked "T'STAT".

   c. To reduce risk of ignition of hazardous atmospheres, conduit runs must have a sealing fitting connected within 18 inches (457 mm).

   Factory installed conduits require no further sealing. Integral Disconnect is sealed at factory.

4. The internal grounding terminal in the control enclosure (or in the integral disconnect enclosure when this option is provided) shall be used as the equipment grounding means. An external bonding terminal is provided for a supplementary bonding connection where local authorities permit or require such a connection.

FINAL INSPECTION

1. Before application of electrical power:

   a. Check that all connections are secured and comply with the applicable wiring diagram (see Figure 9) and code requirements,

   b. Confirm that the power supply is compatible with the data plate rating of the heater,

   c. Remove any foreign objects from the heater,

   d. Install all covers and verify that all enclosures are well secured, and

   e. Ensure that the fan rotates freely. See Figure 6 for proper direction of fan rotation.

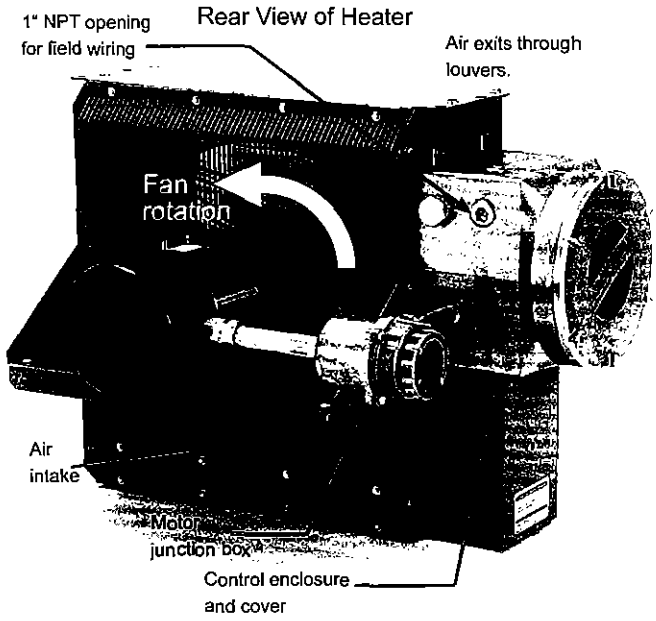

Do not install conduit below heater (see Figure 3).

FIGURE 6

Control Enclosure & Field Wiring

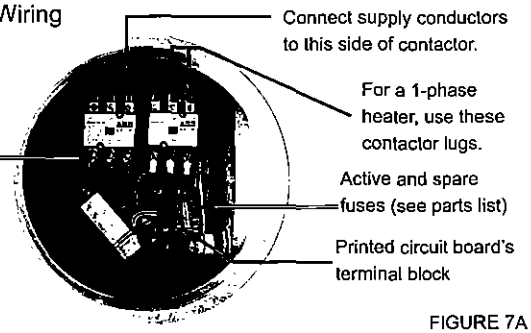

FIGURE 7A

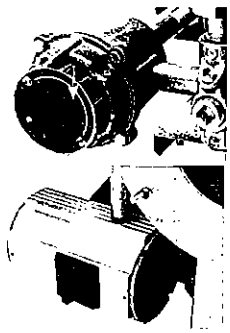

FIGURE 8

Optional Built-in Disconnect & Field Wiring

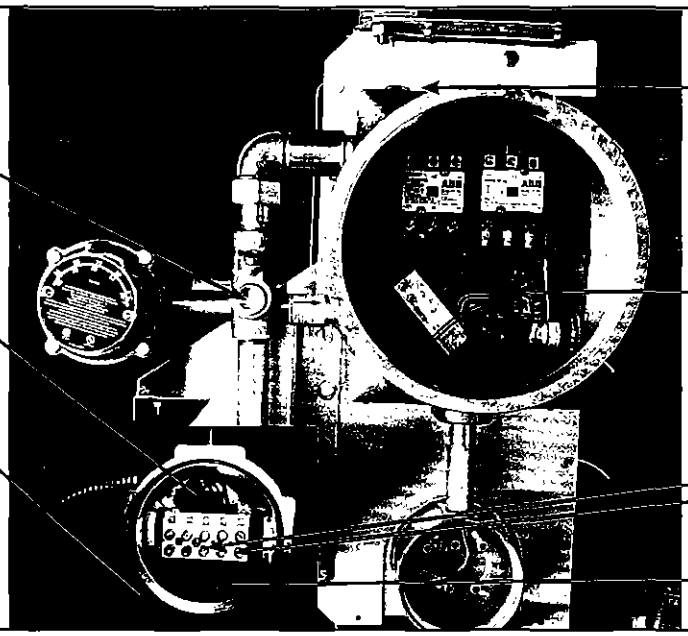

FIGURE 7B

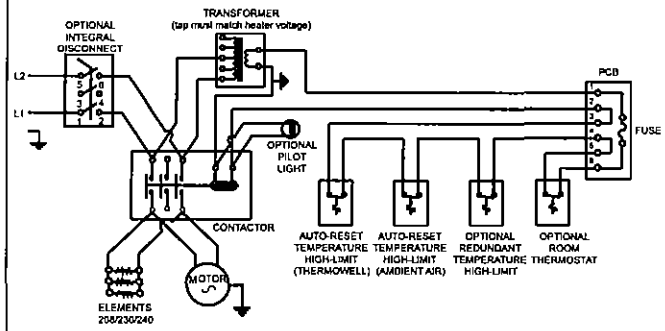

1-PHASE
WIRING SCHEMATIC

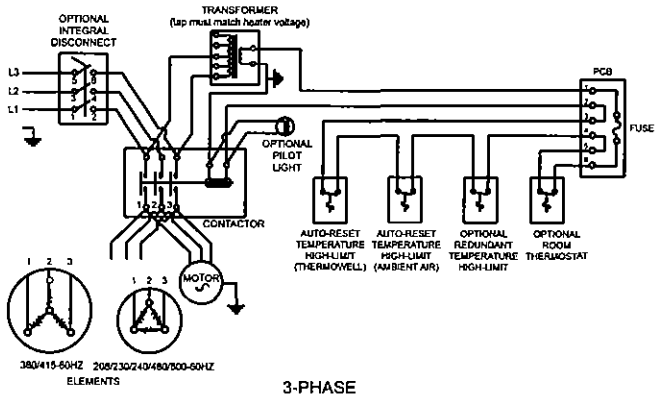

3-PHASE
WIRING SCHEMATIC

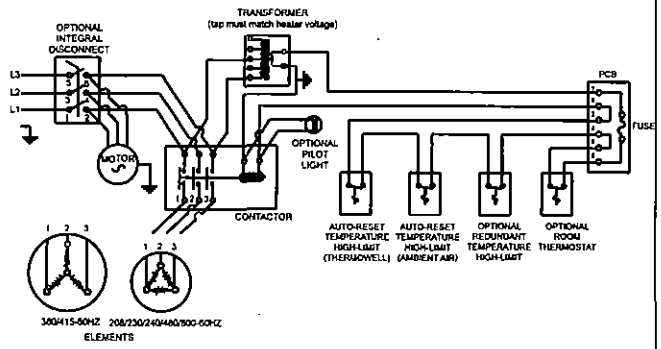

3-PHASE
WIRING SCHEMATIC
CONTINUOUS FAN OPTION

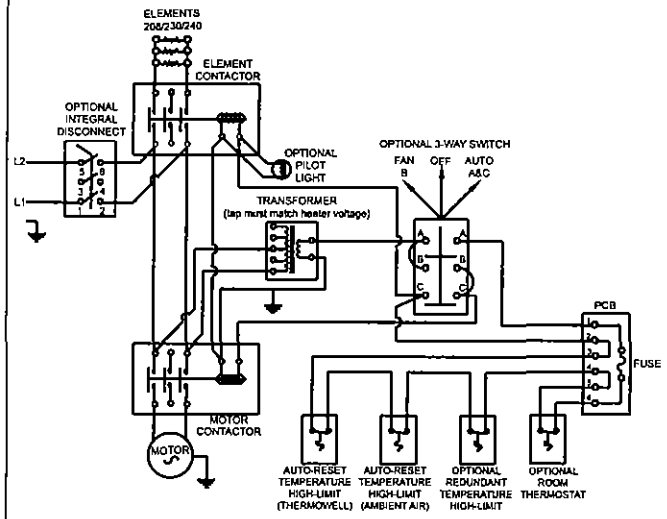

1-PHASE
WIRING SCHEMATIC
W/OPTIONAL PILOT LIGHT AND 2-WAY SWITCH

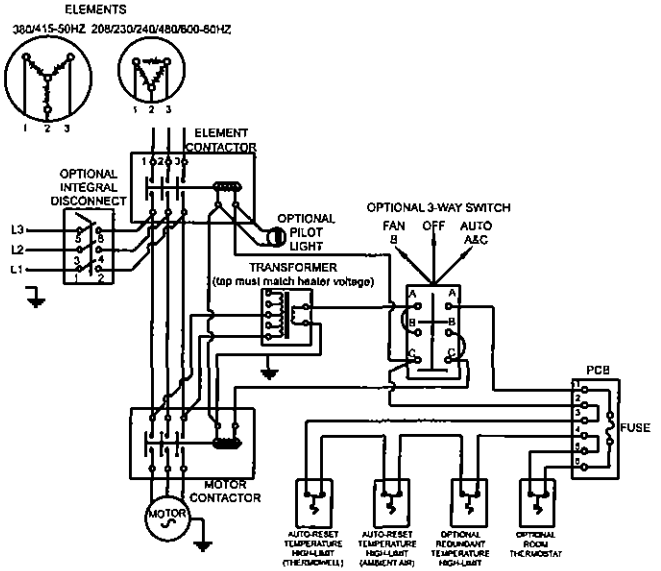

3-PHASE
WIRING SCHEMATIC
3-WAY SWITCH

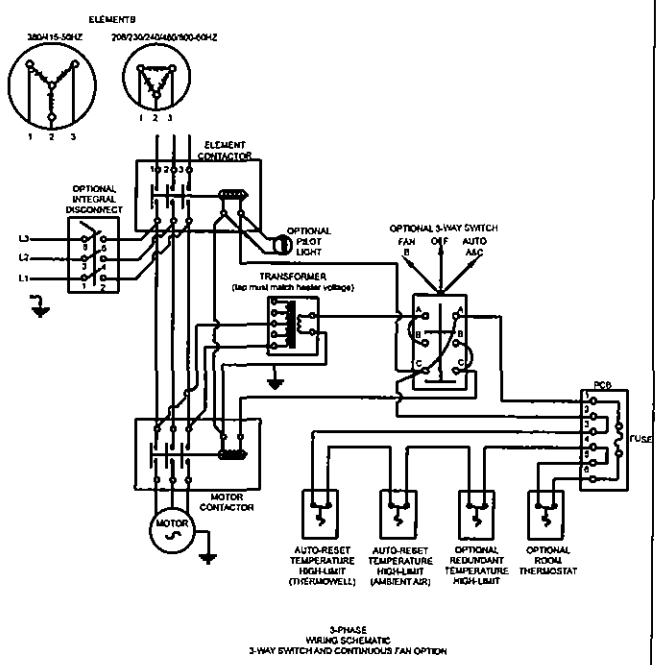

3-PHASE
WIRING SCHEMATIC
3-WAY SWITCH AND CONTINUOUS FAN OPTION

FIGURE 9

FX5 TECHNICAL DATA FOR 50 HZ ELECTRIC AIR HEATERS

MODEL	NOTE	AIR FLOW (CFM)	VOLTAGE (V)	NOMINAL WATTAGE (kW)	PHASE	MAX. MOTOR NAMEPLATE CURRENT (A)	HEATER WATTAGE (W)	TOTAL CURRENT (A)	MINIMUM CIRCUIT AMPACITY (A)	SUPPLY WIRE SIZE (AWG)	MAXIMUM FUSE SIZE (A)	TEMPERATURE RISE °F	TEMPERATURE RISE °C	CORE PART NUMBER	CONTACTOR PART NUMBER
FX5-220150-025		700	220	2.5	1	2.7	2,270	11.4	14.3	14	15	11.3	6.3	9529	3618
FX5-220150-042		700	220	4.2	1	2.7	3,950	19.1	23.9	10	25	19.0	10.5	9530	3618
FX5-220150-063		700	220	6.3	1	2.7	6,050	28.6	35.8	8	40	28.5	15.8	9531	3618
FX5-220150-084		700	220	8.4	1	2.7	8,140	38.2	47.8	6	50	37.9	21.1	9532	3619
FX5-220150-126*		1450	220	12.6	1	1.4	12,100	57.3	71.6	2	75	27.5	15.3	9533	3619
FX5-230150-028		700	230	2.8	1	2.7	2,480	12.2	15.3	12	20	12.6	7.0	9529	3618
FX5-230150-046		700	230	4.6	1	2.7	4,310	20.0	25.0	10	25	20.8	11.5	9530	3618
FX5-230150-069		700	230	6.9	1	2.7	6,610	30.0	37.5	8	40	31.2	17.3	9531	3618
FX5-230150-138*		1450	230	13.8	1	1.4	13,200	59.9	74.9	2	80	30.1	16.7	9533	3619
FX5-380350-025		700	380	2.5	3	0.7	2,270	3.8	4.8	16	5	11.3	6.3	9529	3618
FX5-380350-042		700	380	4.2	3	0.7	3,950	6.4	8.0	16	10	19.0	10.5	9530	3618
FX5-380350-063		700	380	6.3	3	0.7	6,050	9.6	12.0	14	15	28.5	15.8	9531	3618
FX5-380350-084		700	380	8.4	3	0.7	8,140	12.8	16.0	12	20	37.9	21.1	9532	3618
FX5-380350-125		1450	380	12.5	3	0.7	12,100	19.0	23.8	10	25	27.3	15.1	9533	3618
FX5-380350-209		3000	380	20.9	3	1.0	20,300	31.8	39.8	8	40	22.0	12.2	9535	3618
FX5-400350-028		700	400	2.8	3	0.7	2,480	4.0	5.0	16	5	12.6	7.0	9529	3618
FX5-400350-046		700	400	4.6	3	0.7	4,310	6.6	8.3	16	10	20.8	11.5	9530	3618
FX5-400350-069		700	400	6.9	3	0.7	6,610	10.0	12.5	14	15	31.2	17.3	9531	3618
FX5-400350-093		700	400	9.3	3	0.7	8,900	13.4	16.8	12	20	42.0	23.3	9532	3618
FX5-400350-139		1450	400	13.9	3	0.7	13,200	20.1	25.1	10	30	30.3	16.8	9533	3618
FX5-400350-185		1450	400	18.5	3	0.7	17,800	26.7	33.4	8	35	40.3	22.4	9534	3618
FX5-400350-231		3000	400	23.1	3	1.0	22,200	33.3	41.6	8	45	24.3	13.5	9535	3618
FX5-415350-037		700	415	3.7	3	0.7	3,510	5.1	6.4	16	10	16.7	9.3	9537	3618
FX5-415350-075		700	415	7.5	3	0.7	7,240	10.4	13.0	14	15	33.9	18.8	9539	3618
FX5-415350-149		1450	415	14.9	3	0.7	14,500	20.7	25.9	10	30	32.5	18.1	9541	3618
FX5-415350-224		3000	415	22.4	3	1.0	21,800	31.2	39.0	8	40	23.6	13.1	9543	3618
FX5-440350-042		700	440	4.2	3	0.7	3,950	5.5	6.9	16	10	19.0	10.5	9537	3618
FX5-440350-084		700	440	8.4	3	0.7	8,140	11.0	13.8	14	15	37.9	21.1	9539	3618
FX5-440350-168		1450	440	16.8	3	0.7	16,300	27.5	34.4	8	35	36.6	20.4	9541	3618
FX5-440350-209		3000	440	20.9	3	1.0	20,300	27.5	34.4	8	35	22.1	12.3	9542	3618

NOTES:

* Exceeds the 48 Amp circuit limit of NEC 424-22. DS5 not available for these units.

1. Minimum conductor size for 30°C (86°F) ambient. Derate conductor for ambient temperature. Use minimum 90°C (194°F) insulation.
2. Heater is functioning normally if at rated voltage the amp draw is within 10% of the value in this table.
3. Operation at lower voltages will result in reduced heat output and amp draw.
4. Add "T" to model number when adding a built-in thermostat.
5. Add "D" to model number when adding a built-in disconnect switch.
6. Add "P" to model number when adding a built-in pilot light.
7. Add "S" to model number when adding a three-way switch.
8. Add "H" to model number for units with high "off" (deenergized) ambient temperatures.
9. Add "U" to model number for units with continuous fan option.
10. Add "A" to model number for units with stainless steel cabinet.

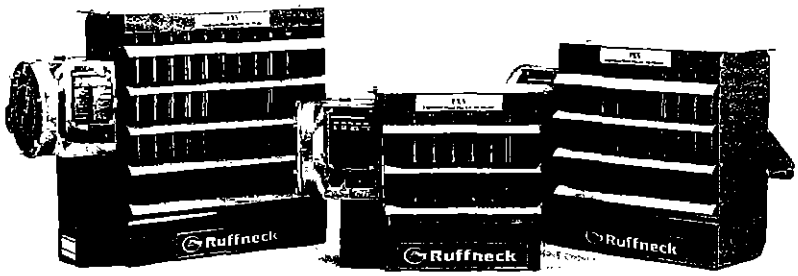

FX5 TECHNICAL DATA FOR 60 HZ ELECTRIC AIR HEATERS

MODEL	NOTE	VOLTAGE (V)	NOMINAL WATTAGE (kW)	PHASE	MAX. MOTOR NAMEPLATE CURRENT (A)	HEATER WATTAGE (W)	TOTAL CURRENT (A)	MINIMUM CIRCUIT AMPACITY (A)	SUPPLY WIRE SIZE (AWG)	MAXIMUM FUSE SIZE (A)	TEMPERATURE RISE °F	TEMPERATURE RISE °C	CORE PART NUMBER	CONTACTOR PART NUMBER
FX5-208160-030		208	3.0	1	2.7	2,700	14.4	18.0	12	20	11.2	6.2	9523	3618
FX5-208160-050		208	5.0	1	2.7	4,700	24.0	30.0	10	30	18.6	10.3	9524	3618
FX5-208160-075		208	7.5	1	2.7	7,200	36.1	45.1	6	50	27.9	15.5	9525	3619
FX5-208160-100	*	208	10.0	1	2.7	9,690	48.1	60.1	4	70	37.2	20.7	9526	3619
FX5-208360-030		208	3.0	3	1.4	2,700	8.3	10.4	14	15	11.2	6.2	9523	3618
FX5-208360-050		208	5.0	3	1.4	4,700	13.9	17.4	12	20	18.6	10.3	9524	3618
FX5-208360-075		208	7.5	3	1.4	7,200	20.8	26.0	10	30	27.9	15.5	9525	3618
FX5-208360-100		208	10.0	3	1.4	9,700	27.8	34.8	8	35	37.2	20.7	9526	3618
FX5-240160-030		240	3.0	1	2.7	2,700	12.5	15.6	12	20	11.2	6.2	9529	3618
FX5-240160-050		240	5.0	1	2.7	4,700	20.8	26.0	10	30	18.6	10.3	9530	3618
FX5-240160-075		240	7.5	1	2.7	7,200	31.3	39.1	8	40	27.9	15.5	9531	3618
FX5-240160-100		240	10.0	1	2.7	9,700	41.7	52.1	6	60	37.2	20.7	9532	3619
FX5-240160-150	*	240	15.0	1	1.4	14,400	62.5	78.1	2	80	27.1	15.1	9533	3619
FX5-240360-030		240	3.0	3	1.4	2,700	7.2	9.0	14	15	11.2	6.2	9529	3618
FX5-240360-050		240	5.0	3	1.4	4,700	12.0	15.0	14	15	18.6	10.3	9530	3618
FX5-240360-075		240	7.5	3	1.4	7,200	18.0	22.5	10	25	27.9	15.5	9531	3618
FX5-240360-100		240	10.0	3	1.4	9,700	24.1	30.1	8	35	37.2	20.7	9532	3618
FX5-240360-150		240	15.0	3	1.4	14,400	36.1	45.1	6	50	27.1	15.1	9533	3619
FX5-480160-030	°	480	3.0	1	1.3	2,700	6.3	7.9	14	15	11.2	6.2	9536	3618
FX5-480160-050	°	480	5.0	1	1.3	4,700	10.4	13.0	14	15	18.6	10.3	9537	3618
FX5-480160-075	°	480	7.5	1	1.3	7,200	15.6	19.5	12	20	27.9	15.5	9538	3618
FX5-480160-100	°	480	10.0	1	1.3	9,700	20.8	26.0	10	30	37.2	20.7	9539	3618
FX5-480160-150	°	480	15.0	1	1.3	14,400	31.3	39.1	8	40	27.1	15.1	9540	3618
FX5-480160-200	°	480	20.0	1	1.3	19,400	41.7	52.1	6	60	36.1	20.1	9541	3619
FX5-480360-030		480	3.0	3	0.7	2,700	3.6	4.5	14	15	11.2	6.2	9536	3618
FX5-480360-050		480	5.0	3	0.7	4,700	6.0	7.5	14	15	18.6	10.3	9537	3618
FX5-480360-075		480	7.5	3	0.7	7,200	9.0	11.3	14	15	27.9	15.5	9538	3618
FX5-480360-100		480	10.0	3	0.7	9,700	12.0	15.0	14	15	37.2	20.7	9539	3618
FX5-480360-150		480	15.0	3	0.7	14,400	18.0	22.5	10	25	27.1	15.1	9540	3618
FX5-480360-200		480	20.0	3	0.7	19,400	24.1	30.1	8	35	36.1	20.1	9541	3618
FX5-480360-250		480	25.0	3	1.0	24,200	30.1	37.6	8	40	45.2	25.1	9542	3618
FX5-480360-300		480	30.0	3	1.0	29,200	36.1	45.1	6	50	26.4	14.6	9543	3619
FX5-480360-350		480	35.0	3	1.0	34,200	42.1	52.6	6	60	30.7	17.1	9544	3619
FX5-600360-030		600	3.0	3	0.6	2,700	2.9	3.6	14	15	11.2	6.2	9545	3618
FX5-600360-050		600	5.0	3	0.6	4,700	4.8	6.0	14	15	18.6	10.3	9546	3618
FX5-600360-075		600	7.5	3	0.6	7,200	7.2	9.0	14	15	27.9	15.5	9547	3618
FX5-600360-100		600	10.0	3	0.6	9,700	9.6	12.0	14	15	37.2		9548	3618
FX5-600360-150		600	15.0	3	0.6	14,400	14.4	18.0	12	20	27.1	15.1	9549	3618
FX5-600360-200		600	20.0	3	0.6	19,400	19.2	24.0	10	25	36.1	20.1	9550	3618
FX5-600360-250		600	25.0	3	0.8	24,200	24.1	30.1	8	35	45.2	25.1	9551	3618
FX5-600360-300		600	30.0	3	0.8	29,200	28.9	36.1	8	40	26.4	14.6	9552	3618
FX5-600360-350		600	35.0	3	0.8	34,200	33.7	42.1	8	45	30.7	17.1	9553	3619

* Exceeds the 48 Amp Circuit limit of NEC 424-22. DS5 not available for these units.

° 480V 1 Phase units are certified Class I, Div. 1, Group D and Class II, Div. 1, Groups F & G.

NOTES:

1. Minimum conductor size for 30°C (86°F) ambient. Derate conductor for ambient temperature. Use minimum 90°C (194°F) insulation.
2. Heater is functioning normally if at rated voltage the amp draw is within 10% of the value in this table.
3. Operation at lower voltages will result in reduced heat output and amp draw.
4. Add "T" to model number when adding a built-in thermostat.
5. Add "D" to model number when adding a built-in disconnect switch.
6. Add "P" to model number when adding a built-in pilot light.
7. Add "S" to model number when adding a three-way switch.
8. Add "H" to model number for units with high "off" (deenergized) ambient temperatures.

SPECIFICATIONS FOR ALL 60 HZ MODEL

		Nominal kW	3	5	7.5	10	15	20	25	30	35
Max. Altitude		(ft.)	12,000	8,000	10,000	7,000	10,000	7,000	10,000	7,000	6,000
		(m)	3,658	2,438	3,048	2,134	3,048	2,134	3,048	2,134	1,829
Air Flow	@ 70°F	(CFM)	850				1750		3600		
	@ 21°C	(m^3/hr.)	1444				2973		6116		
Horizontal Air Throw		(ft.)	30				40		70		
		(m)	9.1				12.2		21.3		
Max. Mounting Height		(ft.)	10				10		20		
(to underside)		(m)	3.0				3.0		6.1		
Motor Power		(HP)	1/2				1/2		1/2		
(min)		(kW)	0.373				0.373		0.373		
Fan Diameter		(in.)	12				16		20		
		(mm)	305				406		508		
Net Weight	without DS5	(lbs.)	140				168		201		
		(kg)	63.5				76.2		91.2		
	with DS5	(lbs.)	152				180		213		
		(kg)	78.9				81.6		96.6		
Shipping Weight	without DS5	(lbs.)	194				218		252		
		(kg)	88				98.9		114.3		
	with DS5	(lbs.)	206				230		264		
		(kg)	93.4				104.3		119.7		

Temperature Code Rating	T3B 165°C (329°F) Class I & II.
Enclosures	NEMA Type 7 & 9. For dry, indoor use only. Do not immerse in water. Do not store or use in areas exposed to rain or snow.
Motor Type	Explosion-proof. Thermally protected. Permanently lubricated ball bearings.1725 RPM.
Fan	Aluminum blade. Steel spider and hub with 5/8 in. (15.875 mm) bore.
Fan Guard	Split design with close wire spacing. 1/4 in. (6.3 mm) dia. probe will not enter.
Mounting Holes	Four 9/16 in. (14.3 mm) diameter holes at top of heater.
Heating Elements	Three long-life, low watt-density, high grade metal-sheathed elements.
Temperature High-Limit	Automatic reset type, snap-action bimetal, open on temperature rise. Rated 100,000 cycles at 10 amps, handles 0.128 amps.
Control Circuit	120 Volts, 0.128 amps, 15VA. (Grounded).
Optional Built-in Thermostat	Explosion-proof. 2°C to 28°C (36°F to 82°F).
Optional Built-in Disconnect Switch	DS5 for use only on heaters with total current not exceeding 48-Amps. Lockout bar accepts 1/4" diameter padlock shackle.
Optional Three Way Switch	Fan only, Off, Auto.
Optional Pilot Light	Indicates heat-on cycle.
Control Transformer	Multi-tap primary, 120 V secondary, 25 VA.
Contactor	40 or 75 amp. Rated for 500,000 mechanical operations. 120 Volts, 15VA coil (separately fuse-protected).
Heat Transfer Fluid	Long life formulated propylene glycol and water, freeze protected to -45°C (-49°F).
Cabinet Material	14 ga. (0.075 in.) (1.90 mm) steel. Epoxy coated with five-stage pretreatment, including iron phosphate. Optional stainless steel.
Core	Steel with integral aluminum fins, vacuum charged and hermetically sealed.
Conduit Material	Heavy walled, 0.122 in. (3.1 mm) steel.
Overpressure Protection	Preset 100 psig (690 kPa) seep pressure relief valve, aluminum body, no field serviceable parts.
Operational Temperature Limitations	-45°C to 40°C (-49°F to 104°F).
Storage Limitations	-45°C to 80°C (-49°F to 176°F), short term to 120°C (248°F). Do not immerse in water. Do not exposed to rain or snow.

SPECIFICATIONS FOR ALL 50 HZ MODEL

		Nominal kW	2.5	3.7&4.2	6.3&7.5	8.4	12.5&12.6	14.9&16.7	20.9	22.4
Max. Altitude		(ft.)	12,000	8,000	10,000	7,000	10,000	7,000	10,000	7,000
		(m)	3,658	2,438	3,048	2,134	3,048	2,134	3,048	2,134
Air Flow	@ 70°F	(CFM)	700				1450		3000	
	@ 21°C	(m^3/hr.)	1189				2463		5096	
Horizontal Air Throw		(ft.)	25				35		60	
		(m)	7.6				10.7		18.2	
Max. Mounting Height		(ft.)	10				10		20	
(to underside)		(m)	3.0				3.0		6.1	
Motor Power		(HP)	1/4				1/4		1/2	
(min)		(kW)	0.187				0.187		0.373	
Fan Diameter		(in.)	12				16		20	
		(mm)	305				406		508	
Net Weight	without DS5	(lbs.)	140				168		201	
		(kg)	63.5				76.2		91.2	
	with DS5	(lbs.)	152				180		213	
		(kg)	78.9				91.6		96.6	
Shipping Weight	without DS5	(lbs.)	194				218		252	
		(kg)	88				98.9		114.3	
	with DS5	(lbs.)	206				230		264	
		(kg)	93.4				104.3		119.7	

Temperature Code Rating	T3B 165°C (329°F) Class I & II.
Enclosures	NEMA Type 7 & 9. For dry, indoor use only. Do not immerse in water. Do not store or use in areas exposed to rain or snow.
Motor Type	Explosion-proof. Thermally protected. Permanently lubricated ball bearings.1725 RPM.
Fan	Aluminum blade. Steel spider and hub with 5/8 in. (15.875 mm) bore.
Fan Guard	Split design with close wire spacing. 1/4 in. (6.3 mm) dia. probe will not enter.
Mounting Holes	Four 9/16 in. (14.3 mm) diameter holes at top of heater.
Heating Elements	Three long-life, low watt-density, high grade metal-sheathed elements.
Temperature High-Limit	Automatic reset type, snap-action bimetal, open on temperature rise. Rated 100,000 cycles at 10 amps, handles 0.128 amps.
Control Circuit	120 Volts, 0.128 amps, 15VA. (Grounded).
Optional Built-in Thermostat	Explosion-proof. 2°C to 28°C (36°F to 82°F).
Optional Built-in Disconnect Switch	DS5 for use only on heaters with total current not exceeding 48-Amps. Lockout bar accepts 1/4" diameter padlock shackle.
Optional Three Way Switch	Fan only, Off, Auto.
Optional Pilot Light	Indicates heat-on cycle.
Control Transformer	Multi-tap primary, 120 V secondary, 25 VA.
Contactor	40 or 75 amp. Rated for 500,000 mechanical operations. 120 Volts, 15VA coil (separately fuse-protected).
Heat Transfer Fluid	Long life formulated propylene glycol and water, freeze protected to -45°C (-49°F).
Cabinet Material	14 ga. (0.075 in.) (1.90 mm) steel. Epoxy coated with five-stage pretreatment, including iron phosphate. Optional stainless steel.
Core	Steel with integral aluminum fins, vacuum charged and hermetically sealed.
Conduit Material	Heavy walled, 0.122 in. (3.1 mm) steel.
Overpressure Protection	Preset 100 psig (690 kPa) seep pressure relief valve, aluminum body, no field serviceable parts.
Operational Temperature Limitations	-45°C to 40°C (-49°F to 104°F).
Storage Limitations	-45°C to 80°C (-49°F to 176°F), short term to 120°C (248°F). Do not immerse in water. Do not exposed to rain or snow.

HEATER ASSEMBLY DIAGRAM

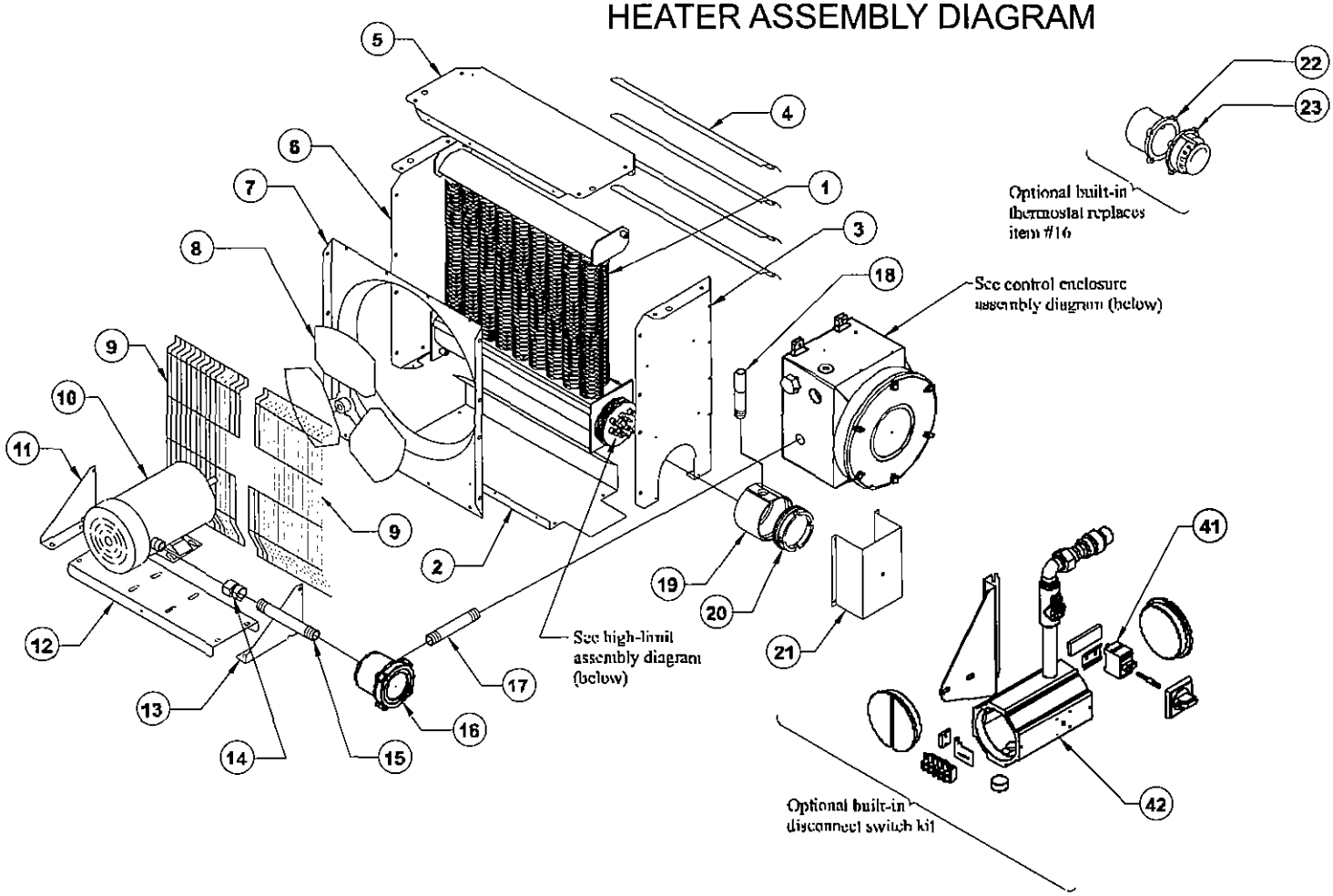

CONTROL ENCLOSURE ASSEMBLY DIAGRAM

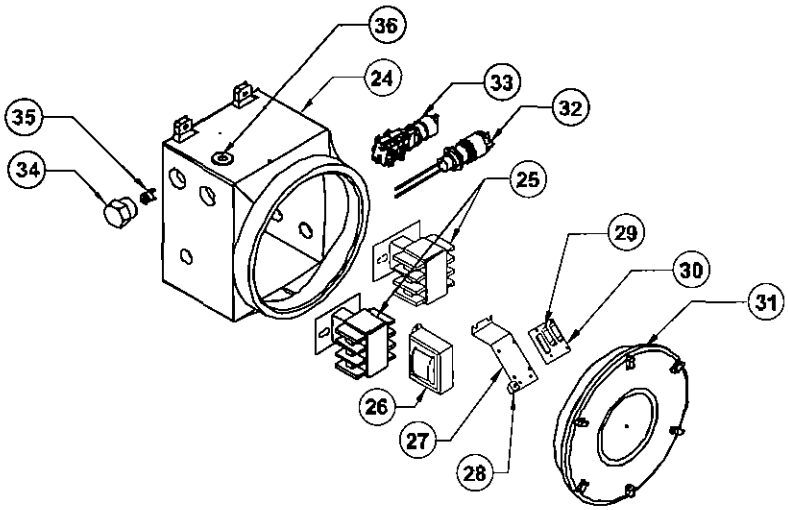

HIGH LIMIT ASSEMBLY DIAGRAM

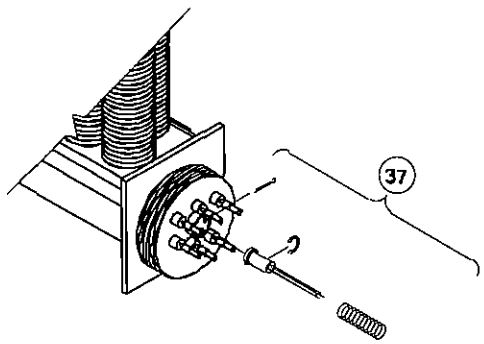

US-BAR CONFIGURATION ALL 1-PHASE MODELS

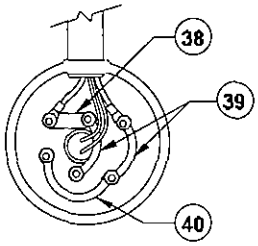

BUS-BAR CONFIGURATION FOR ALL 3-PHASE (EXCEPT 380 50 HERTZ)

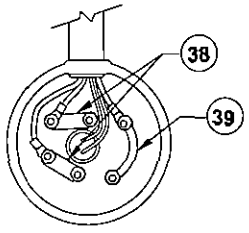

BUS-BAR CONFIGURATION 3-PHASE 380 VOLT 50 HERTZ MODELS

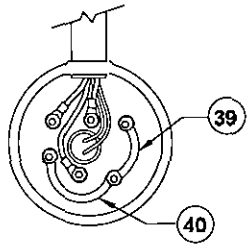

PARTS LIST
FORCED AIR ELECTRIC HEATERS

	PART NUMBERS			Please have model and serial number available before calling
ITEM	**2.5 - 10 kW**	**12.5 - 20 kW**	**20.9 - 35 kW**	**DESCRIPTION**
1	**	**	**	Core
2	Painted: 9203 S.S.: 9507	Painted: 9204 S.S.:9508	Painted: 9205 S.S.: 9509	Panel, Bottom
3	Painted: 9191 S.S.: 9192	Painted: 9193 S.S.: 9194	Painted: 9195 S.S.: 9196	Panel, Left Side
4	4075	4076	4077	Louver Kit, c/w Screws
5	Painted: 9200 S.S.: 9513	Painted: 9201 S.S.: 9514	Painted: 9202 S.S.: 9505	Panel, Top
6	Painted: 9197 S.S.: 9510	Painted: 9198 S.S.: 9511	Painted: 9199 S.S.: 9512	Panel, Right Side
7	Painted: 3782 S.S.: 9212	Painted: 3783 S.S.: 9213	Painted: 3784 S.S.: 9214	Panel, Fan Shroud
8	4023	4024	4025	Fan
9	Painted: 4078 S.S.: 9504	Painted: 4079 S.S.: 9505	Painted: 4080 S.S.: 9506	Fan Guard Kit
10	208/240V 60HZ 1 PH: 220 V 50 HZ 1 PH: 480V 60 HZ 1 PH: 208/240/480V 60 HZ 3 PH: 380/415V 50 HZ 3 PH: 600V 60 HZ 3 PH:	1979 1979 2396 9082 9082 9294		Motor, Explosion-Proof
11	Painted: 3789 S.S.: 9112	Painted: 3789 S.S.: 9112	Painted: 3789 S.S.: 9112	Bracket, Motor Mount Right
12	Painted: 3785 S.S.: 9206	Painted: 3786 S.S.: 9207	Painted: 3787 S.S.: 9208	Channel, Motor Mount
13	Painted: 3788 S.S.: 9111	Painted: 3788 S.S.: 9111	Painted: 3788 S.S.: 9111	Bracket, Motor Mount Left
14	-	-	-	Coupling, Motor Mount
15	3813	3814	3815	Conduit, Motor
16	5371	5371	5371	Cover, Thermostat Enclosure
17	-	-	-	Conduit, Control Enclosure
18	9314	9315	9316	Conduit, Element Enclosure
19	3793	3793	3793	Enclosure, Element
20	3510	3510	3510	Cover, Element Enclosure
21	Painted: 9354 S.S.: 9516	Painted: 9355 S.S.: 9517	Painted: 9356 S.S.: 9518	Panel, Element Enclosure Guard
22	4983	4983	4983	Enclosure, Thermostat
23	5032	5032	5032	Thermostat, Built-in Kit
24	9156	9156	9156	Enclosure, Control
25	**	**	**	Contactor
26	60 HZ: 3812	50 HZ: 4416		Transformer
27	3809	3809	3819	Bracket, Printed Circuit Board
28	1876	1876	1876	Terminal, 6-14 ga. Screw Lug
29	3519	3519	3519	Fuse, 1/4 Amp
30	3514	3514	3514	Printed Circuit Board Assembly
31	9158	9158	9158	Cover, Control Enclosure
32	9279	9279	9279	Light, Explosion-Proof Pilot
33	9283	9283	9283	Switch, Explosion-proof 3-way
34	9267	9267	9267	Thermowell, Ambient High-Limit
35	9303	9303	9303	High Limit Ambient Temperature
36	9289	9289	9289	Plug, 1" NPT Explosion-Proof
37	4082	4082	4082	Temperature High Limit Kit
38	3816	3816	3816	Bus-Bar, Straight
39	3817	3817	3817	Bus-Bar, Small Curved
40	3818	3818	3818	Bus-Bar, Large Curved
41	6471	6471	6471	Switch, Disconnect Rotary
42	Painted: 9273 S.S.: 9520	Painted: 9498 S.S.: 9521	Painted: 9499 S.S.: 9522	Kit, DS5 Assembly

**See technical data table for part numbers. NOTE: For items not shown, contact factory

REPAIR & REPLACEMENT

WARNING

Disconnect heater from power supply at integral disconnect or fuse box before opening enclosures or servicing heater. Lock the switch in the "OFF" (open) position and/or tag the switch to prevent unexpected power application. IF INTEGRAL DISCONNECT IS BEING SERVICED, verify that power has been disconnected at fuse box or main panel. Lock the switch in the "OFF" (open) position and/or tag the switch to prevent unexpected power application. Heater surfaces may be hot.

1. After repairing any component:
   a. check that electrical connections are correct and secure (see Figure 9),
   b. remove any foreign material from enclosures,
   c. install and secure all covers,
   d. ensure that all fasteners are tight,
   e. remove all foreign objects from heater, and
   f. ensure air exits through louvers and fan rotates counterclockwise when viewed from rear of heater (see Figure 14).

CORE

The heater core is vacuum charged and not field repairable.
For core removal:

1. Remove cabinet bottom and element enclosure cover.
2. Disconnect all wires entering element enclosure (see Figure 10).
3. Slightly loosen all cabinet bolts shown in Figure 10, to prevent the core from binding.
4. With an assistant supporting the weight of the core, remove the 3 core mounting bolts. Carefully lower the core out of the cabinet (see Figure 11).
5. To return core to factory, use crate supplied with exchange core to protect the element terminals and plate threads.
6. To reinstall, lift the core up into cabinet while an assistant guides the element wires into the element enclosure conduit.
7. Position the core and tighten the 3 core mounting bolts. Tighten the remaining cabinet bolts.

TEMPERATURE HIGH-LIMIT

1. Remove temperature high-limit assembly and clean the inside of the thermowell (see Figure 12). A clean thermowell will ensure good thermal contact.
2. Use only a factory supplied temperature high-limit to ensure safe operation. (refer to the instructions that accompany the replacement Temperature High-Limit Kit).
3. Reinstall the temperature high-limit assembly with the snap ring and spring into the thermowell without damaging the insulating tube. Secure in place with the cotter pin (see Figure 13).

MOTOR, FAN & FAN GUARD

1. Remove bolts holding the motor to the motor mount. On units with a built in thermostat, remove the bolts on the back of the thermostat enclosure.
2. Remove conduit #1 located between motor junction box and control enclosure by turning it in the direction illustrated (see Figure 14). Note conduits #1 and #2 are not interchangeable and have left hand threads on one end, this end is indicated by a machined groove.
3. Remove the 2 piece fan guard assembly (see Figure 15).
4. Lift the motor assembly off the motor mount.
5. Before removing the fan, measure and record the location of the fan hub on the motor shaft (see Figure 16). If difficult to remove, use a gear puller on the fan hub.
6. To reassemble, place motor assembly onto motor mount and fasten the fan guard to cabinet.
7. Simultaneously engage and tighten both ends of conduit #1 into enclosures. Leave a 1/16" to 3/16" (1.6 to 4.8 mm) gap between the motor and fan guard (see Figure 16). Adjust conduit #2 to center the fan in the shroud.
8. To ensure a minimum 5 thread engagement, threaded ends of conduits must protrude a minimum of 1/16" (1.6mm) into enclosures. The groove on conduit #2 must not be more than 7/8" (22mm) from motor coupling (see Figure 14).
9. Bolt motor to motor mount. Manually spin the fan blade to ensure fan rotates freely.
10. Air must exit through louvers and fan must rotate counterclockwise when viewed from rear of heater (see Figure 14).

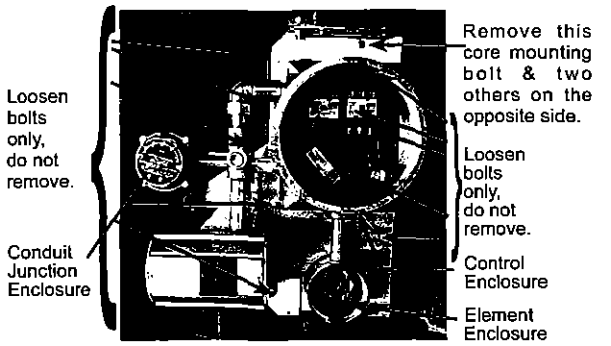

FIGURE 10

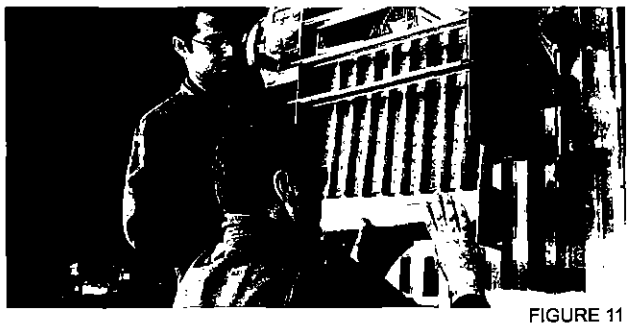
FIGURE 11

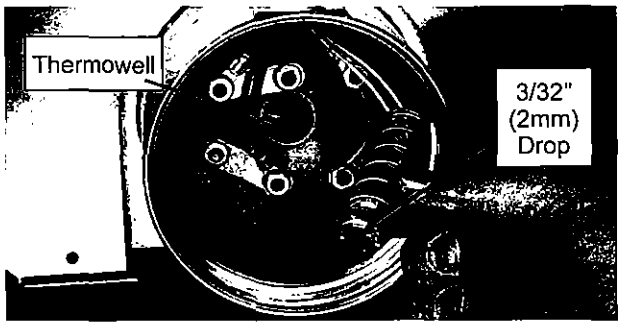

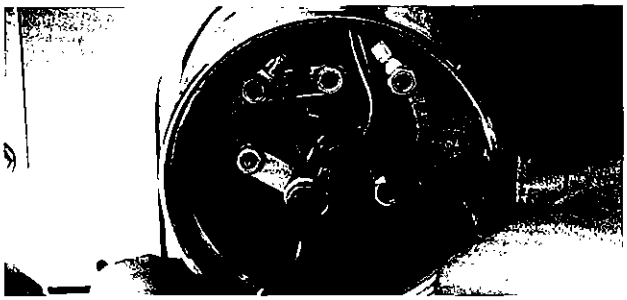
FIGURE 13

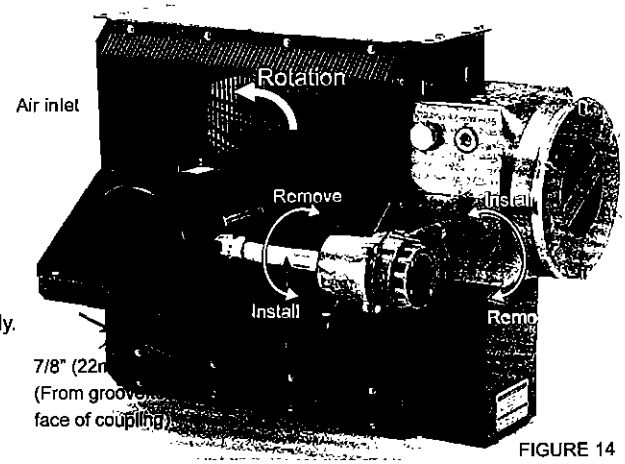

FIGURE 14

FIGURE 15

FIGURE 16

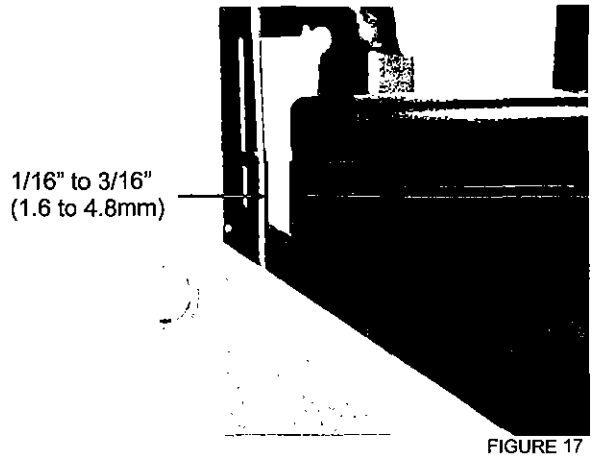

FIGURE 17

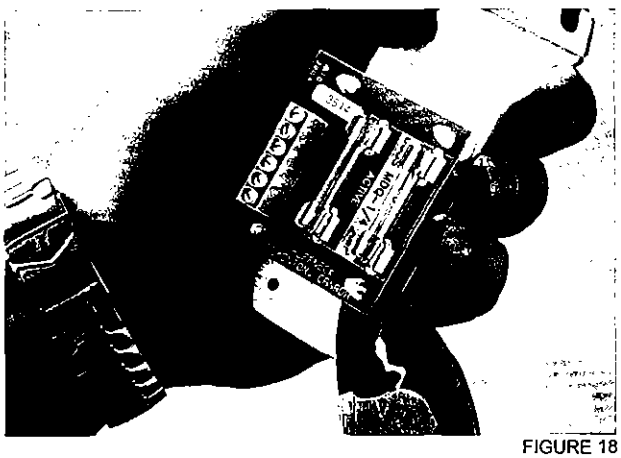

FIGURE 18

PRINTED CIRCUIT BOARD

1. After removing the printed circuit board (P.C. Board) bracket assembly from the control enclosure, separate the P.C. Board from the bracket by cutting off the plastic spacers (see Figure 18).
2. Reinstall a new factory supplied P.C. Board onto the mounting bracket using new non-conducting spacers of the same length. Spacers are supplied with a new P.C. Board. Reinstall the control circuit ground wire to the printed circuit board bracket (see Figure 9).

CONTACTOR

1. Loosen, but do not remove contactor mounting screws. Slide contactor off mounting screws.
2. Replace with a factory supplied contactor of the same rating.

TRANSFORMER

1. Replace with a factory supplied transformer of the same rating.
2. On the new transformer, select primary wires to match heater voltage. Ensure that the correct transformer secondary lead is grounded (see Figure 9). Individually terminate all unused wires using closed end connectors.

FUSE

Replace fuse with one of the same type and rating as indicated on P.C. Board or refer to parts list. An extra fuse should be stored in the clips marked "SPARE".

HEATING ELEMENTS

Heating elements are an integral part of the vacuum charged core. A factory exchange core can be shipped immediately from stock. Refer to "Core" section for details.

CABINET PANELS

Bolt-on cabinet panels are individually replaceable.

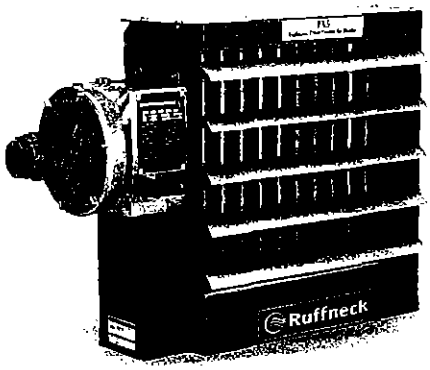

Ruffneck™
Heaters for the Harshest Environments

5918 Roper Road
Edmonton, Alberta,
Canada T6B 3E1
Phone: (780) 466-3178
Fax: (780) 468-5904
www.ccithermal.com

PLEASE ADHERE TO INSTRUCTIONS PUBLISHED IN THIS MANUAL.
Failure to do so may be dangerous and may void certain provisions of your warranty.
For further assistance, please call:

24 Hr. Hotline: 1-800-661-8529

(U.S.A. and Canada)

Please have model and serial numbers available before calling.

CCI Thermal Technologies INC.

LIMITED 3 YEAR WARRANTY

CCI Thermal Technologies warrants all Ruffneck™ FX5 Series Explosion-Proof Electric Fan Forced Air Heaters against defects in materials and workmanship for a period of three (3) years from date of purchase on the following terms:

1. We will provide replacement parts free of charge as necessary to restore any unit to operating condition, provided that the inoperative parts be returned to us freight prepaid and that the replacement parts be accepted freight collect.
2. The complete heater may be returned to our plant for repair or replacement (at our discretion), provided that all related freight costs be borne by the customer.
3. Corrosion and contamination by dirt, dust, etc. will not be considered as defects and, therefore, are not warrantable.
4. The heater must not be modified in any way.
5. The heater must be installed, used and stored only in accordance with the owner's manual and placarded information.

This warranty shall be limited to the actual equipment involved and, under no circumstances, shall include or extend to installation or removal costs, or to consequential losses or damages.

Spectra

Operator's Manual

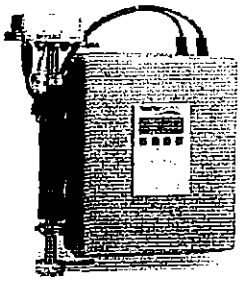

SS500

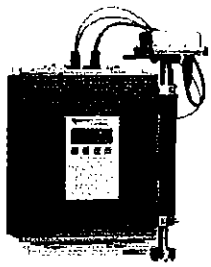

SS2000

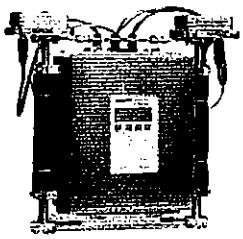

SS3000

SS500/SS2000/SS3000
Moisture and Carbon Dioxide Analyzers

OPERATOR'S MANUAL

Products of

SpectraSensors™

972 North Amelia Avenue
San Dimas, CA 91773
Tel: 800.619.2861
Fax: 909.542.0402
www.spectrasensors.com

Copyright © 2006 SpectraSensors, Inc. No part of this manual may be reproduced in whole or in part without the express written permission of SpectraSensors, Inc. SpectraSensors reserves the right to change product design and specifications at any time without prior notice.

Table of Contents

Figures and Tables iii
About this Manual 1
Who Should Read This Manual 1
How to Use This Manual 1
Special Symbols Used in This Manual 2
General Warnings and Cautions 3
SpectraSensors Overview 4
About the Natural Gas Sensors 4
Difference Between the SS500, SS2000, and SS3000 4
How the Analyzer Works 5
Getting Started 7
Unpacking the Analyzer 7
What Should be Included in the Shipping Box 7
Inspecting the Analyzer 7
SS500/SS2000 9
SS500 Mid-Sensitivity Moisture Analyzer 10
SS2000 Moisture/Carbon Dioxide Analyzer 11
SS3000 12
SS3000 Dual Channel Gas Analyzer 13
Installing the Analyzer 17
Hardware and Tools for Installation 17
Mounting the Analyzer 18
Connecting the Gas Lines 19
Connecting Electrical Power to the Analyzer 20
Power Supply Recommendations 20
Connecting the Output Signals 22
Powering Up Sequence 25
Power up the Analyzer: 26
Receiving Serial Data (RS-232 Output) 26
Reading the Data 27
Calibrating the Analyzer is not Required 28
Operating the Analyzer 29
Using the Keypad 29

Modes and Functions Defined 30
Using Modes and Functions 31
Scaling and Calibrating the Loop Signal 38
Reading Diagnostic Data With HyperTerminal 39
Reading Diagnostic Data with Microsoft Excel 40
Using SpectrumPlot II Software 41
How to Avoid Contaminating the Analyzer 44
Disconnecting or Powering-Down the Analyzer 44
Troubleshooting 45
Gas Leaks 45
High Humidity 45
Excessive Sampling Gas Temperatures and Pressures 45
Electrical Noise 46
Verification of Offset Parameter 46
Peak Tracking Reset Procedure 46
Instrument Problems 47
Service Contact 51
Disclaimers 51
Warranty 52
Index 53

FIGURES AND TABLES

Figures

Figure 1: Laser sample cell 5
Figure 2: Main external components on the SS500/SS2000 analyzer (shown in NEMA 4X stainless steel enclosure) 9
Figure 3: Main external components on the SS3000 analyzer (shown with single sample inlet) 12
Figure 4: The series of analyzers and enclosures 15
Figure 5: The series of analyzers with XP enclosures 16
Figure 6: Mounting tab 18
Figure 7: Sample cell gas line connection 19
Figure 8: For 12- or 24-volt systems, connect DC minus line to 21
Figure 9: Connect AC neutral wire to terminal marked "NEU," and hot wire to terminal marked "LINE." 21
Figure 10: Connect the ground wire to the ground contact in the lower right corner of the enclosure 22
Figure 11: Signal and power connection diagram showing customer supplied conduits and hubs. 24
Figure 12: Remove the mating terminal block from base by hand 24
Figure 13: Insert signal wires into terminals 24
Figure 14: Replace block on base and check to make sure all terminals are connected tightly. 25
Figure 15: LCD on the keypad displays normal operational mode <Normal Mode> 26
Figure 16: COM port settings 27
Figure 17: Data output 27
Figure 18: SS500/2000/3000 keypad 30
Figure 19: Mode 6 data dump displayed in graphical format using Excel 41
Figure 20: SpectrumPlot view 43

Tables

Table 1: Specifications of the SS500 analyzer 10
Table 2: Specifications of the SS2000 analyzer 11
Table 3: Specifications of the SS3000 analyzer 13
Table 4: Output signal connections 23
Table 5: Typical values for parameter set points 32
Table 6: Instrument problems matrix 51

ABOUT THIS MANUAL

The SpectraSensors (SS) 500/2000/3000 products are high-speed, extremely reliable extractive analyzers used to measure the concentrations of moisture (H_2O) or carbon dioxide (CO_2) in natural gas. This manual contains a comprehensive overview of SpectraSensors, the SS500, SS2000, and SS3000 analyzers, and step-by-step instructions on:

- Getting started once you receive the analyzer
- Installing the analyzer
- Powering up the analyzer
- Operating the analyzer
  - Reading diagnostic data
  - Powering down the analyzer
- Troubleshooting

Who Should Read This Manual

This manual should be read and referenced by the person who will install, operate, or have contact with the analyzer.

How to Use This Manual

Take a moment to familiarize yourself with this Operator's Manual by reading the Table of Contents (TOC).

Read each section in the manual carefully so you can quickly and easily install and operate the analyzer.

The manual includes images, tables, and charts that provide a visual understanding of the analyzer and its functions. The manual also uses special symbols to make you aware of potential hazards, important information, and valuable tips. Pay close attention to this information.

Special Symbols Used in This Manual

This manual uses the following symbols to represent potential hazards, caution alerts, and important information associated with the analyzer. Every symbol has significant meaning that you should heed:

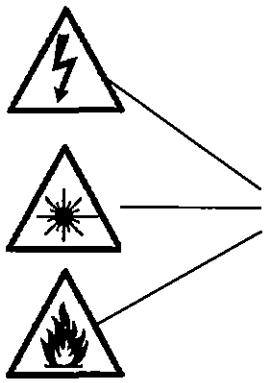

WARNING (electrical, laser, and flammable): *Failure to follow directions may result in bodily harm or worse.*

CAUTION: *Failure to follow all directions may result in damage or malfunction of the analyzer.*

IMPORTANT NOTE: *Important information concerning the installation and operation of the analyzer.*

General Warnings and Cautions

Explosion hazard. Substitution of components may impair suitability for Class 1, Div. 2.

Explosion hazard. Do not connect or disconnect equipment unless power has been switched off or the area is known to be non-hazardous.

Use damp cloth to clean display and keypad to avoid static electricity discharge.

Do not exceed 10 PSIG in sample cell. Damage to cell window may result.

Do not hold or carry the analyzer by the measurement heads or sample cells. Doing so may cause optical alignment problems affecting the performance of your sensor.

Class 3B invisible laser radiation. When open, avoid exposure to beam. Conforms to provisions of US 21 CFR1040 10. Class I laser product. Refer servicing to manufacturer-qualified personnel.

When selecting an analyzer, the total system design must be considered to ensure safe, trouble-free performance. Function, sizing, proper installation, operation, and maintenance are beyond the control of SpectraSensors and are the responsibilities of the system designer and user.

Always disconnect the main power to the instrument before attempting any repair.

Read and understand all instructions before attempting to operate the instrument. Observe all caution notes and warning labels.

SPECTRASENSORS OVERVIEW

SpectraSensors is located in San Dimas, California, a short distance away from the California Institute of Technology's Jet Propulsion Laboratory where the basic technology behind the products was developed. This technology was first utilized for accurate measurements of gases in the Earth's atmosphere in the early 1980s, and recently was incorporated into miniaturized and space-qualified instruments for Mars research. SpectraSensors obtained the commercial rights to this NASA technology and is now offering state-of-the-art gas sensors for commercial applications. SpectraSensors has been manufacturing H_2O and CO_2 analyzers for the natural gas industry since 2001.

About the Natural Gas Sensors

The SS500, SS2000, and SS3000 are Tunable Diode Laser (TDL) absorption spectrometers operating in the near-infrared (near-IR) wavelength region. Each sensor contains a TDL light source and detector configured to allow high sensitivity in a compact package. It also contains microprocessor-based electronics and software that incorporates advanced operational and data-processing algorithms.

Each analyzer is designed for use at natural gas sampling stations, extractive analysis installations, or wherever fast response and high-accuracy measurements are required over a wide measurement range. It is a high-performance instrument capable of measuring H_2O and CO_2 in methane and other gases without regard to corrosive gases and contamination from other gas phase constituents in the stream.

Several patents protect the TDL absorption technology incorporated in SpectraSensors' series of analyzers.

Difference Between the SS500, SS2000, and SS3000

The SS500 and SS2000 are single channel H_2O analyzers. The SS2000 is a high-accuracy version of the SS500 (see **Table 1** on page 10). The SS2000 (see **Table 2** on page 11) has a detection limit of 0.5 lbs/mmscf. The SS500 has a detection limit of 2 lbs/mmscf). The SS2000 is also available as a CO2 analyzer. The analyzer software measures the amount of laser light absorbed by the target molecules. This method provides reliable readings because of the very specific wavelength that is being analyzed. The laser, detector, software, and electronics are extremely fast with four measurements taken every second. Other than the detection limits, the SS500 and SS2000 analyzers function the same.

The SS500 and SS2000 are housed in three (optional) enclosures:

- Explosion-proof aluminum National Electrical Manufacturers Association (NEMA) 7, 4 (150 lbs.)
- Stainless steel NEMA 4x (25 lbs.)
- Fiberglass NEMA 4x (15 lbs.)

The SS3000 analyzer (See **Table 3** on page 13.) is a dual-channel version of the SS2000. It is capable of measuring H_2O in two streams or H_2O and CO_2 in the same stream using the SpectraSensors' tunable laser technology. The analyzer is equipped with an optional single

gas inlet (common to both flow cells) or two gas inlets (separate gas streams for each flow cell).

The SS3000 is housed in two (optional) enclosures:

- Explosion-proof aluminum NEMA 7, 4x – single or dual gas inlets (200 lbs.)
- Stainless steel NEMA 4x – single and dual gas inlets (27 lbs.)

How the Analyzer Works

The analyzer detects the presence of contaminants that form corrosives, helping to prevent dangerous leaks or potentially catastrophic ruptures. The analyzer uses a robust, TDL that emits near-IR light that passes through the gas in the sample cell of the analyzer (see **Figure 1**). The analyzer scans the laser wavelength across the range where H_2O or CO_2 molecules absorb the laser light or energy, reducing the amount of light that passes through to the detector. The ratio of the light absorbed by the water vapor line to the light on the detector when the wavelength is off the water line is proportional to the water vapor concentration. The higher the concentration of H_2O or CO_2 present in the gas sample, the more absorption of light. This ratio is further corrected for variations in temperature and pressure in the measurement cell. Because the analyzer measures the absorption in the volume of the gas, the measurement is more accurate than surface-based sensors that are subject to surface contamination.

More specifically, the SS500, SS2000 (see **Figure 2** on page 9) and SS3000 (see **Figure 3** on page 12) analyzers measure the H_2O and CO_2 by monitoring their absorption of laser light at specific wavelengths in the near-IR wavelength region near 2μm. The human eye responds to light in the range of approximately 0.4μm (deep violet) to 0.8μm (deep red), but most molecules respond to light at longer wavelengths that are invisible to the human eye (the infrared region). By using a laser that operates precisely at a wavelength where H_2O or CO_2 (many other gases can also be measured using this technique) absorb light, it is possible to determine accurately the abundance of the gas by measuring the amount of light that the molecules absorb.

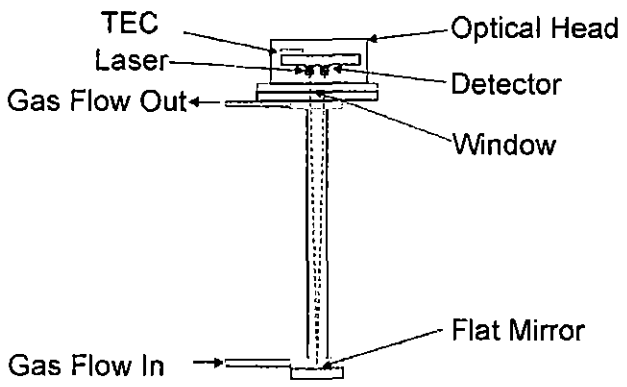

Figure 1: Laser sample cell

GETTING STARTED

When the analyzer arrives, you should take a few preliminary steps before installing the unit. This section discusses:

- How to best unpack the analyzer
- What should be included in the shipping box
- How to inspect the analyzer

This section also provides images of the analyzer and specifications for reference.

Unpacking the Analyzer

Analyzers housed in a stainless steel or fiberglass enclosure arrive in a tightly sealed box. If the analyzer is ordered without a sample conditioning panel, it will arrive in the box bolted to a plywood panel to protect it during shipping. Use a 7/16" socket wrench to undo the bolts and remove the analyzer from the plywood. Save the plywood and other packing materials for use should you need to return the analyzer to the factory.

The analyzer housed in an explosion-proof aluminum enclosure arrives on a pallet. This analyzer weighs more than 150 lbs and you may need to transport it to its mounting location with mechanical assistance (see **Figure 4** and **Figure 5** on page 15 and 16).

What Should be Included in the Shipping Box

The contents of the box or contents on the pallet should contain:

- The SpectraSensor 500, 2000, or 3000 analyzer
- Operator's Manual to install and operate the analyzer
- External serial cable to connect the analyzer to a computer to receive and transmit data **(two cables for the SS3000)**
- SpectrumPlot II software CD and instructions to perform diagnostic functions for the analyzer

If any of these contents are missing, contact your sales representative.

Inspecting the Analyzer

For the analyzer housed in a stainless steel or fiberglass enclosure, place the analyzer on a flat surface (analyzer housed in explosion-proof aluminum enclosure keep intact) and carefully inspect the analyzer for dents, dings, or general damage. Inspect the inlet and outlet connections for damage, such as bent tubing. Report any damage to the carrier.

The analyzer comes specially ordered with unique model number configurations (MNC) and accessories (see **Table 4** on page14). These configurations are useful in identifying the power requirements. Cross-check the MNCs noted on the label displayed at the top left side of the analyzer with the MNCs for your specific model. The model number, serial number,

and power on the analyzer should match the MNCs. If they do not match, contact your sales representative.

SS500/SS2000

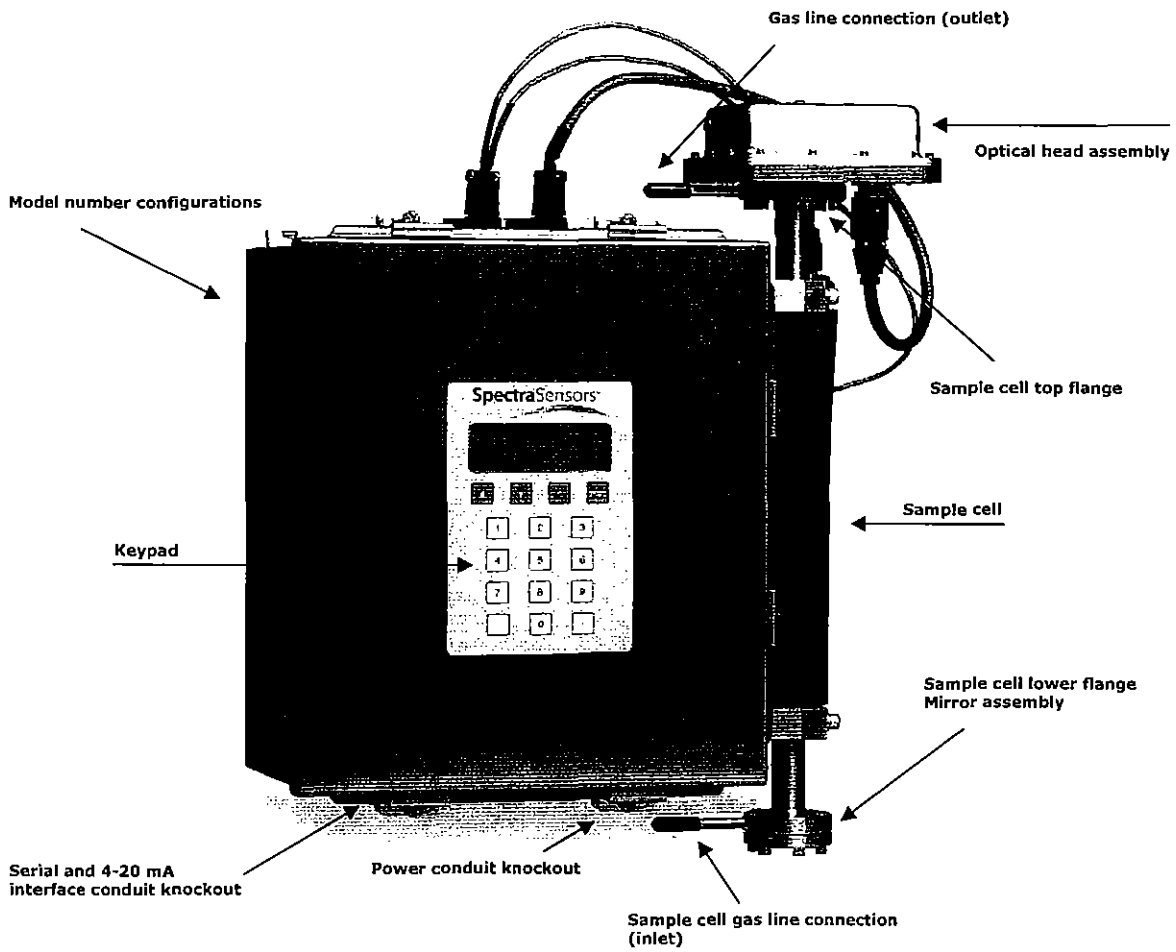

Figure 2: Main external components on the SS500/SS2000 analyzer (shown in NEMA 4X stainless steel enclosure)

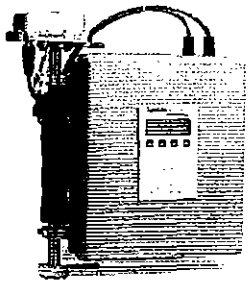

SS500
Mid-Sensitivity Moisture Analyzer

Specifications

Performance

Moisture Concentration (H_2O)*	2 to 20 lbs/MMSCF Nat. Gas 42-422 ppmv
Accuracy (H_2O)	±2% of reading or ±10 ppmv, NIST Traceable
Dew/Frost Point	-58° to -20°F (-50° to -29°C)
Response time**	Display updates 0.25-2 seconds (software adjustable)

* Consult factory for alternative ranges
** Flow Rate Dependant - Sample cell volume is 0.005 ft^3. Time to displace cell volume at a flow of 2 scfh is ~10 sec.

Environmental Range

Temperature	-4° to 122°F (-20° to 50°C)
Inlet Pressure	10 to 25 PSIA, **10 PSIG Maximum** (70-170 kPa Abs, **70 kPaG Maximum**)
Sample Cell Construction	316L Series Polished Stainless Steel
Sample Flow Rate	0.2 to 20 SCFH (100-10,000 cc/min)
Contaminant Sensitivity	None for gas phase glycol, methanol, amines, hydrogen sulfides or mercaptans

Power Requirements

Input Voltage	100-240 VAC, 50-60 HZ Standard 9-16 VDC or 18-32 VDC Optional
Current	1 amp maximum @ 120VAC 1.6A @ 24VDC, 3.2A @ 12 VDC

Physical Specifications

Outputs	Streaming RS-232 or optional Modbus (all parameters), 4-20mA loop (concentration only)
LCD Display	Concentration, Cell Pressure and Cell Temperature
Enclosure Type	NEMA 4X – Fiber Reinforced Plastic NEMA 4X – Stainless Steel Optional
Size (NEMA 4x)	18"H x 16"W x 5.5"D (457mm H x 406mm W x 140mm D)
Weight	w/FRP Enclosure - Approx. 13lbs (6Kg) w/SS Enclosure - Approx. 25lbs (11.5Kg)

Area Classification

Certification (stainless steel enclosure only)	CSA Class I, Division 2, Groups C and D, Temp Code T3C

Table 1: Specifications of the SS500 analyzer

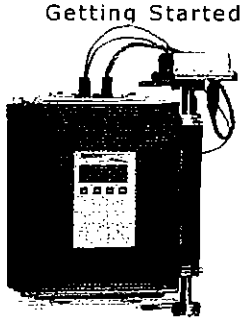

SS2000
Moisture/Carbon Dioxide Analyzer

Specifications

Performance	
Moisture Concentration (H_2O)*	0.5 to 20 lbs/MMSCF Nat. Gas 10-422 ppmv
Accuracy (H_2O)	±2% of reading or ±4 ppmv, NIST Traceable
Dew/Frost Point	-76° to -20°F (-60° to -29°C)
Carbon Dioxide Concentration (CO_2)*	0-10%
Accuracy (CO_2)	± 2% of reading, or ±400 ppmv, whichever is greater
Response time**	Display updates 0.25-2 seconds (software adjustable)

* Consult factory for alternative ranges
** Flow Rate Dependant - Sample cell volume is 0.005 ft^3. Time to displace cell volume at a flow of 2 scfh is ~10 sec.

Environmental Range	
Temperature	-4° to 122°F (-20° to 50°C)
Inlet Pressure	10 to 25 PSIA, **10 PSIG Maximum** (70-170 kPa Abs, **70 kPaG Maximum**)
Sample Cell Construction	316L Series Polished Stainless Steel
Sample Flow Rate	0.2 to 20 SCFH (100-10,000 cc/min)
Contaminant Sensitivity	None for gas phase glycol, methanol, amines, hydrogen sulfides or mercaptans

Power Requirements	
Input Voltage	100-240 VAC, 50-60 HZ Standard 9-16 VDC or 18-32 VDC Optional
Current	1 amp maximum @ 120VAC 1.6A @ 24VDC, 3.2A @ 12 VDC

Physical Specifications	
Outputs	Streaming RS-232 or optional Modbus (all parameters), 4-20mA loop (concentration only)
LCD Display	Concentration, Cell Pressure and Cell Temperature
Size (NEMA 4X)	18"H x 14.8"W x 5.8"D (457mm H x 376mm W x 135mm D)
Weight (NEMA 4X)	Approx. 25lbs (11.5Kg)

Area Classification	
Certification (stainless steel enclosure only)	CSA Class I, Division 2, Groups C and D, Temp Code T3C

Table 2: Specifications of the SS2000 analyzer

SS3000

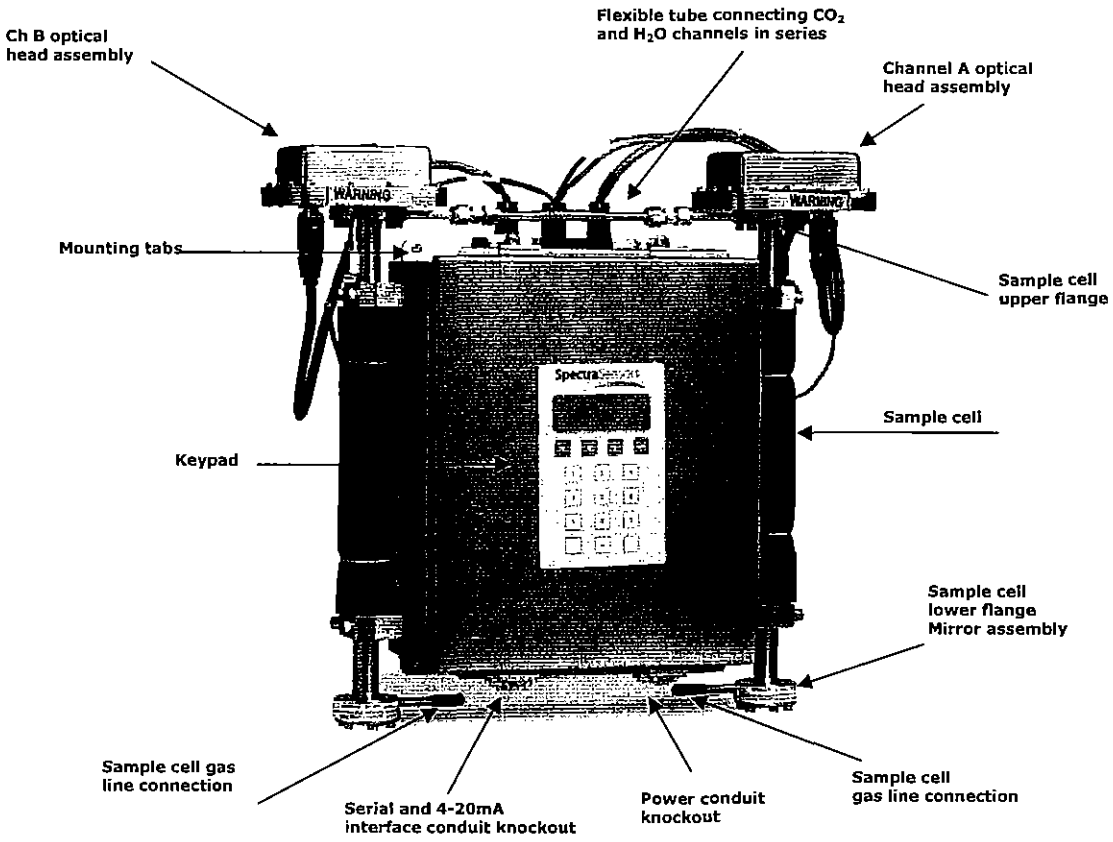

Figure 3: Main external components on the SS3000 analyzer (shown with single sample inlet)

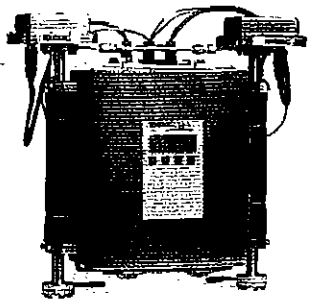

SS3000
Dual Channel Gas Analyzer

Specifications

Performance	
Moisture Concentration (H_2O)*	0.5 to 20 lbs/MMSCF Nat. Gas 10-422 ppmv
Accuracy (H_2O)	±2% of reading or ±4 ppmv, NIST Traceable
Dew/Frost Point	-76° to -20°F (-60° to -29°C)
Carbon Dioxide Concentration (CO_2)*	0-10% in Natural Gas
Accuracy (CO_2)	± 2% of reading, or ±400 ppmv, whichever is greater
Response time**	Display updates 0.25-2 seconds (software adjustable)

* Consult factory for alternative ranges
** Flow Rate Dependant - Sample cell volume is 0.005 ft^3. Time to displace cell volume at a flow of 2 scfh is ~10 sec.

Environmental Range	
Temperature	-4° to 122°F (-20° to 50°C)
Inlet Pressure	10 to 25 PSIA, **10 PSIG Maximum** (70-170 kPa Abs, **70 kPaG Maximum**)
Sample Cell Construction	316L Series Polished Stainless Steel
Sample Flow Rate	0.2 to 20 SCFH (100-10,000 cc/min)
Contaminant Sensitivity	None for gas phase glycol, methanol, amines, hydrogen sulfides or mercaptans

Power Requirements	
Input Voltage	100-240 VAC, 50-60 HZ Standard 9-16 VDC or 18-32 VDC Optional
Current	1 amp maximum @ 120VAC 1.6A @ 24VDC, 3.2A @ 12 VDC

Physical Specifications	
Outputs – two of each	Streaming RS-232 or optional Modbus (all parameters), 4-20mA loop (concentration only)
LCD Display	Concentration, Cell Pressure and Cell Temperature
Size (NEMA 4X)	18"H x 17.5"W x 5.8"D (457mm H x 444mm W x 147mm D)
Weight (NEMA 4X)	Approx. 27lbs (12.3Kg)

Area Classification	
Certification (stainless steel enclosure only)	CSA Class I, Division 2, Groups C and D, Temp Code T3C

Table 3: Specifications of the SS3000 analyzer

SS500 Single Channel Laser Analyzer Model Number Configurations

Single-Channel Analyzer

Housing

1		Non-hazardous stainless steel enclosure (NEMA 4X)	(non-CSA)
2		Explosion-proof aluminum enclosure (NEMA 7, 4)	(non-CSA)
3		Class 1, Div. 2 stainless steel enclosure (NEMA 4X)	
4		Fiberglass enclosure (NEMA 4X)	(non-CSA)

Measured Component

0		H2O range 2 - 20 lbs/MMSCF (42-420 ppmv)	
9		Other	

Background Gas

1		Natural Gas or Methane	
2		Air or Nitrogen	
9		Other	(must be group C or D for CSA)

Power Supply

1		Universal 100/250 VAC, 50/60 Hz	
2		18-32 V DC	
3		9-16 V DC	

SS500- | | | 1 | 1 | | |

SS2000 Single Channel Laser Analyzer Model Number Configurations

Single-Channel Analyzer

Housing

1		Non-hazardous stainless steel enclosure (NEMA 4X)	(non-CSA)
2		Explosion-proof aluminum enclosure (NEMA 7, 4)	(non-CSA)
3		Class 1, Div. 2 stainless steel enclosure (NEMA 4X)	
4		Fiberglass enclosure (NEMA 4X)	(non-CSA)

Measured Component

1		H2O range 0.5 - 20 lbs/MMSCF (10-420 ppmv)	
2		CO2 range 0-10%	
9		Other	

Background Gas

1		Natural Gas or Methane	
2		Air or Nitrogen	
9		Other	(must be group C or D for CSA)

Power Supply

1		Universal 100/250 VAC, 50/60 Hz	
2		18-32 V DC	
3		9-16 V DC	

SS2000- | | | 1 | 1 | | |

SS3000 Dual Channel Laser Analyzer Model Number Configurations

Dual-Channel Analyzer

Housing

1		Non-hazardous stainless steel enclosure (NEMA 4X)	(non CSA)
2		Explosion-proof aluminum enclosure (NEMA 7)	(non CSA)
3		Class 1, Div. 2 stainless steel enclosure (NEMA 4X)	

Gas 1

1		H2O range 0.5 - 20 lbs/MMSCF (10-420 ppmv)	
2		CO2 range 0-10%	
9		Other	

Gas 2 (1=None, see SS2000)

2		H2O range 0.5 - 20 lbs/MMSCF (10-420 ppmv)	
3		CO2 range 0-10%	
9		Other	

Gas Inlet(s)

1		Single gas inlet (Common to both flow cells)	
2		Two gas inlets (Separate gas streams for each flow cell)	

Background Gas

1		Natural Gas or Methane	
2		Air or Nitrogen	
9		Other	(must be group C or D for CSA)

Power Supply

1		Universal 100/250 VAC, 50/60 Hz	
2		18-32 V DC	
3		9-16 V DC	

SS3000- | | | | | | |

Table 5: SS500, SS2000, and SS3000 MNCs

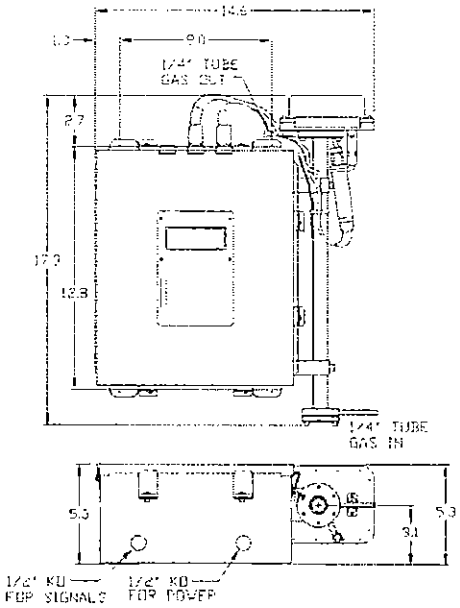

SS500/SS2000

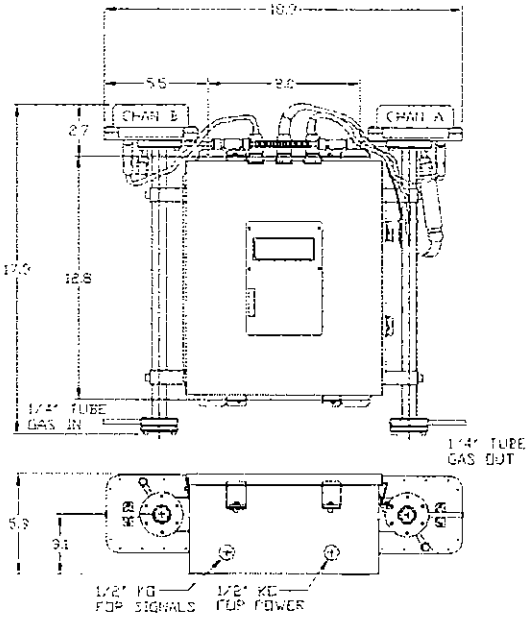

SS3000 SINGLE INPUT

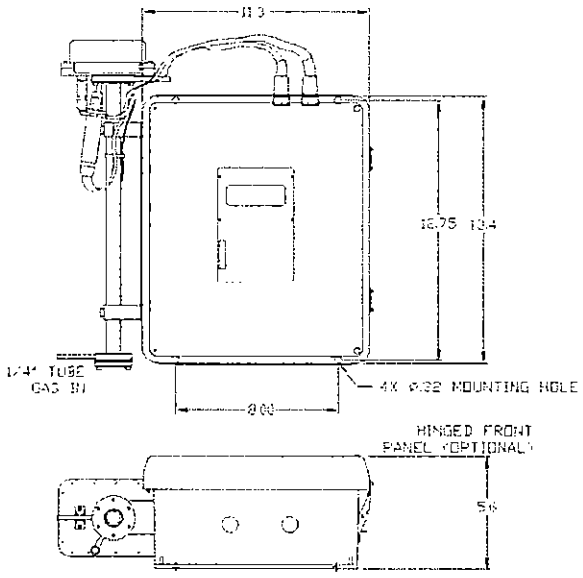

SS500 FIBERGLASS ENCLOSURE

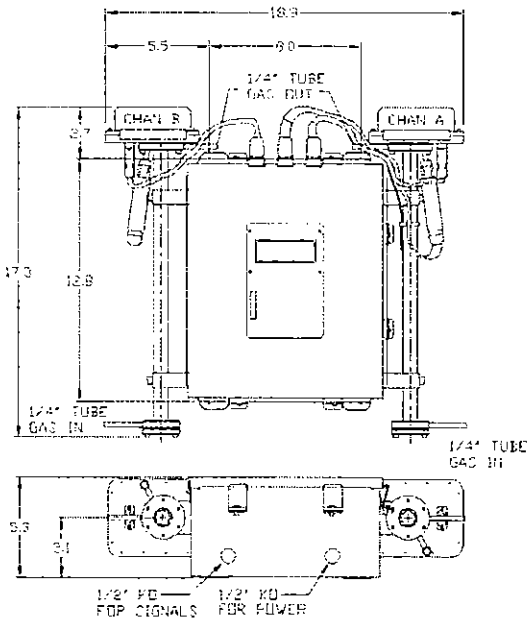

SS3000 DUAL INPUT

Figure 4: The series of analyzers and enclosures

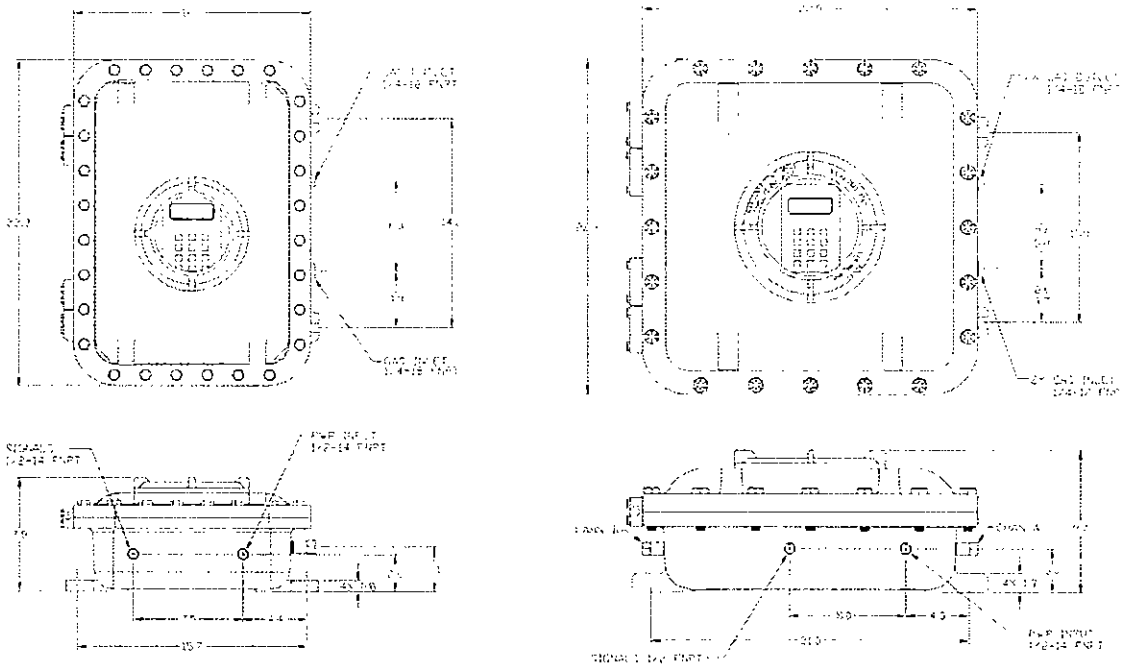

Figure 5: The series of analyzers with XP enclosures

INSTALLING THE ANALYZER

Installing the analyzer requires several steps to ensure it is mounted and connected correctly. This section discusses:

- Tools and hardware needed for installation
- Mounting the analyzer
- Connecting the gas lines
- Connecting the electrical power
- Connecting the output signals
- Powering up the analyzer
- Receiving and reading the data

After completing these steps, the analyzer will be ready for operation.

Avoid jolting the instrument by dropping it or banging it against a hard surface as this could disturb the optical alignment. Do not attempt to pick up the instrument using the sample cell as a handle; it is easily damaged.

Hardware and Tools for Installation

Depending on the model, you may need the following hardware and tools to complete the installation process:

Hardware you may need:

- Membrane separator filter
- Stainless steel compression fittings
- ¼" male pipe thread fitting
- Stainless steel tubing
- ½" conduit hub
- Conduit

Tools you may need:

- ¼" lag bolts or ¼" machine screws
- Drill
- Tape measure
- Leveler
- Pencil
- Socket wrench

Mounting the Analyzer

To set up the analyzer, bolt the unit to a wall or flat surface. Minimizing the gas volume of the sample system and using stainless steel tubing optimizes performance. Mount the analyzer to a location that is free of vibrations.

The most critical mounting issue is to mount the analyzer so that the inlet and outlet lines reach the inlet and outlet connections on the chassis and still maintain flexibility so that the sample lines are not under excessive stress.

To mount the analyzer:

1. Select a location to mount the analyzer.
   The analyzer has four mounting tabs with a .3" hole in each tab (two at the top of the analyzer and two at the bottom).
2. Mark the hole in one of the top tabs with a pencil. (See Figure 6.)
3. Mark the other top tab 8" over from the first.
4. Drill the appropriate size holes for the screws you are using.
5. Hold the analyzer in place and insert the top screws.
6. Repeat the same steps noted above for the bottom tabs.
7. Tighten all four screws. The analyzer should be very secure.

The analyzer is now ready to be connected to the inlet and outlet sampling gas lines.

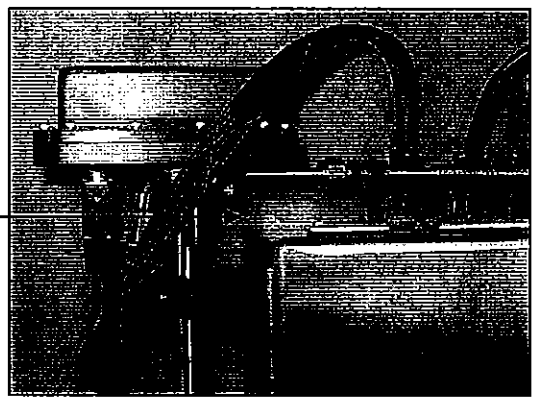

Figure 6: Mounting tab (identical on each rear corner of enclosure at the top and bottom)

Protect the analyzer from overheating in the sun. Shield it with a shade or a cover.

Connecting the Gas Lines

An analyzer housed in a stainless steel or fiberglass enclosure comes equipped with ¼" outside diameter inlet and outlet tubes. Connect these tubes using compression fittings made of stainless steel.

An analyzer housed in an explosion-proof aluminum enclosure comes equipped with ¼" female NPT flame arrestors. Connect these tubes using male NPT swage connector fittings made of stainless steel (see **Figure 7**).

It is important to capture a representative sample of gas from the pipeline. The gas sample must be captured and filtered through a sample-conditioning panel. For more information, refer to the American Petroleum Institute's "Manual of Petroleum Measurement Standards," Chapter 14, Section 1 – Natural Gas Samples for Custody Transfer. Complete sample conditioning panels, including membrane separator filters, are available from SpectraSensors in a variety of configurations. Please contact your sales representative for more information.

The inlet line should be equipped with a membrane separator filter to prevent liquid from entering the sample cell and possibly accumulating on the internal optics. The internal optical elements must remain clean for proper readings.

To connect the gas lines:

1. Run a stainless steel tube (do NOT use a plastic tube) from the outlet of the membrane separator filter to the inlet of the analyzer.
2. Connect a stainless steel tube to the inlet tube of the analyzer using a compression-type union fitting. (For analyzer in explosion-proof aluminum enclosure, connect the tube to the ¼" female NPT fitting on the side of the enclosure.)
3. Connect a stainless steel tube from the analyzer outlet to vent in a safe area.
4. Be sure there is no stress on the tubing when it is aligned to the analyzer.
5. Open the shutoff valve on the inlet line.
6. Check all connections for gas leaks using less than 10 pounds per square inch gauge (PSIG). SpectraSensors recommends using a liquid leak detector.

The pressure in the sample cell must not exceed 10 PSIG. Higher pressure will cause catastrophic damage to the analyzer. It's recommended that you avoid having restrictions on the output vent line of the sample cell and that a pressure relief valve be used on the input line in case of regulator failure.

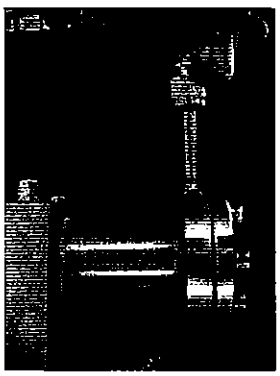

Figure 7: Sample cell gas line connection

Connecting Electrical Power to the Analyzer

Before attaching the wiring to the analyzer, make sure all power to the wires is off.

Failure to properly ground the analyzer can create a high-voltage shock hazard.

You can connect electrical power to the analyzer through the ½" power conduit knockout located at the bottom right side of the analyzer. The analyzer is equipped with either a universal power supply that accommodates both U.S. (115 VAC @ 60 Hz) and European (240 VAC @ 50 Hz) AC power configurations, or a DC input power supply for either 9-16 VDC or 18-32 VDC. Check the manufacturing data label or the terminal block labels to determine the power configuration of your analyzer.

To connect electrical power to the analyzer:

1. Open the enclosure door. Do not to disturb the electrical assembly inside.
2. Install a ½" NEMA 4X-rated conduit hub. For analyzers in an explosion-proof aluminum enclosure, thread the conduit directly into the enclosure. Be sure to use the supplied conduit seals as required by code.
3. Run conduit from the power-source panel to the conduit hub. Since the breaker or switch in the power panel will be the primary way of disconnecting the power from the unit, the power panel should be located within 10 feet of the analyzer. The analyzer should be on a circuit that is protected at 15 amps or less.
4. Pull ground, neutral, and hot wires into the electrical enclosure. For 12- or 24-volt systems, pull ground, plus, and minus.
5. Attach the neutral and hot wires to the power terminal strip by connecting the AC neutral wire to the terminal marked "NEU," the hot wire to the terminal marked "LINE" (see **Figure 9** on page 21), the DC minus line to the terminal marked "-", and the positive line to the terminal marked "+"(see **Figure 8** on page 21)
6. Connect the ground wire to the ground contact in the lower right corner of the enclosure (see **Figure 10** on page 22).

Power Supply Recommendations

The analyzer is standard-equipped with a universal power supply that accommodates all AC power configurations between 100 and 240 VAC.

DC power supplies (9-16 VDC or 18-32 VDC) are optional.

Figure 8: For 12- or 24-volt systems, connect DC minus line to terminal marked "-" and positive line to terminal marked "+."

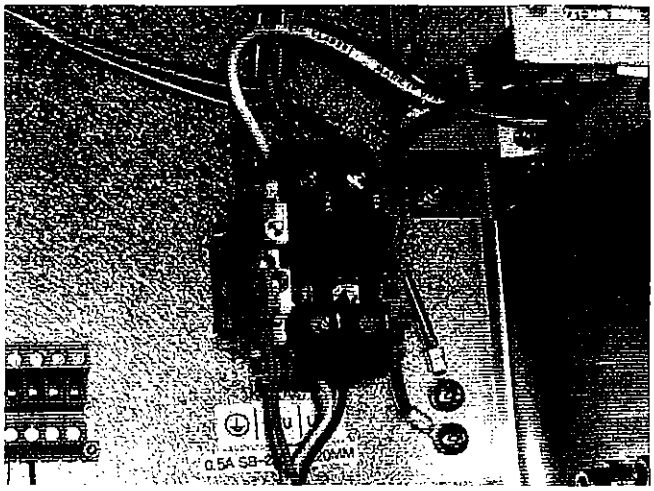

Figure 9: Connect AC neutral wire to terminal marked "NEU," and hot wire to terminal marked "LINE."

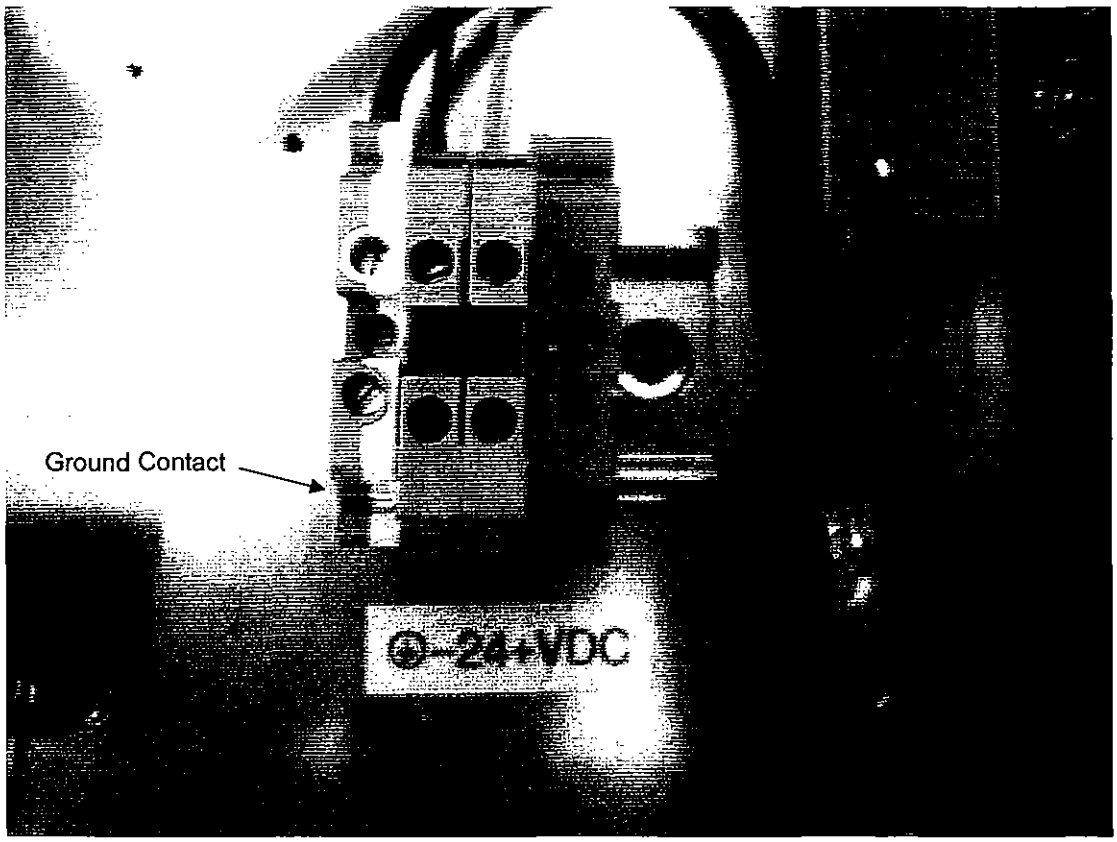

Figure 10: Connect the ground wire to the ground contact in the lower right corner of the enclosure.

Connecting the Output Signals

The 4-20mA (milliampere) current loop and serial outputs are supplied from a mating terminal block inside the analyzer. Connections can be made with customer-supplied cables running into the enclosure through a ½" conduit connected to the ½" knockout on the bottom left side of the analyzer.

Be sure power to the analyzer is turned off before opening the gas sensor enclosure and making any connections.

The 4-20mA current loop outputs are factory set to source current.

To connect the 4-20mA output:

1. Disconnect power from the analyzer and open the enclosure cover. Do not to disturb the electrical assembly inside.
2. Install a ½" conduit hub into the knockout located at bottom left side of the analyzer (see **Figure 11** on page 24). The conduit hub should be rated NEMA 4X.

3. Run conduit from your signal-receiving station to the conduit hub.
4. Pull the signal cable through the conduit into the enclosure.
5. Strip back the jacket and insulation of the signal cable just enough to connect to the mating terminal block.
   The mating terminal block can be pulled up from its base to make the cable connection easier (see **Figure 12** on page 24). **Table 5** shows the terminal number for each of the output signals. Note that there is a single ground connection shared by the serial signals (pin-3). The table also shows the corresponding pin number on the nine-pin Sub-D connector of a computer serial port. Use a separate cable for each channel.
6. Connect the output wires to the desired terminals (see **Figure 13** on page 24).
7. Reinsert the matting terminal block into the base and verify that the terminals are tight (see **Figure 14** on page 25).
8. Close and tighten the enclosure cover.

After power-up, you can scale the current loop receiver using the procedure outlined in a later section of this manual.

Terminal	Description	D-Con
1	Ch. A Serial RX	Pin-3
2	Ch. A Serial TX	Pin-2
3	COM Serial Ground	Pin-5
4	Ch. B Serial RX	Pin-3
5	Ch. B Serial TX	Pin-2
6	Ch. A Current Loop +	
7	Ch. A Current Loop -	
8	Ch. B Current Loop +	
9	Ch. B Current Loop -	

Table 4: Output signal connections

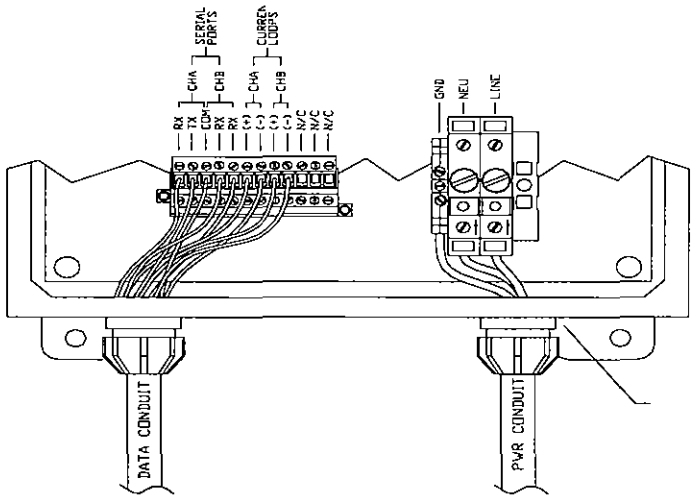

Figure 11: Signal and power connection diagram showing customer supplied conduits and hubs.

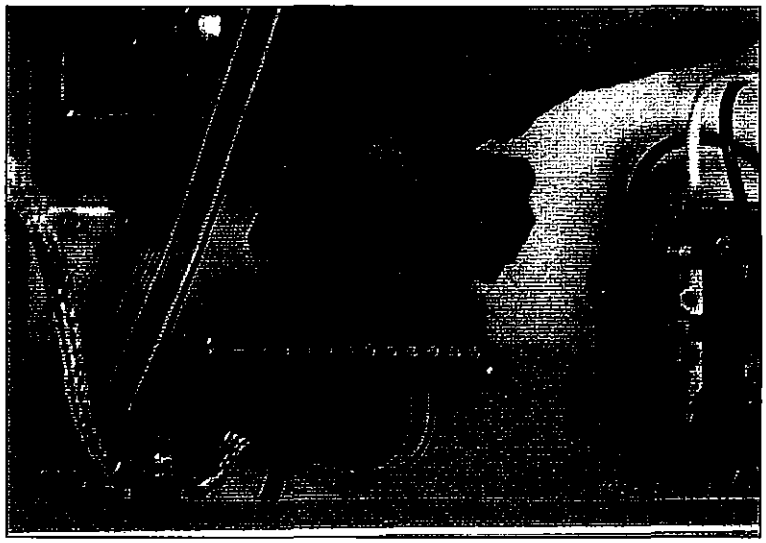

Figure 12: Remove the mating terminal block from base by hand

Figure 13: Insert signal wires into terminals

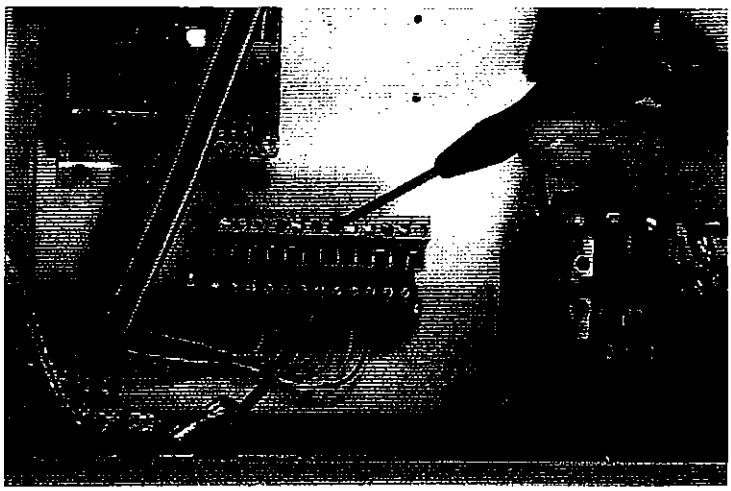

Figure 14: Replace block on base and check to make sure all terminals are connected tightly.

To connect the serial output (SS500, SS2000, and SS3000 Channel A)

1. Feed the wire ends of the SpectraSensor external serial cable (included in the shipping box) through the ½" knockout located on the bottom left side of the analyzer.
2. Remove the green terminal block connector.
3. Insert the black wire (RX) into terminal 1.
   For the SS3000, Channel B, insert the black wire into terminal 4.
4. Insert the red wire (TX) into terminal 2.
   For the SS3000, Channel B, insert the red wire into terminal 5.
5. Insert the shield wire (ground) into terminal 3.
   Same for the SS3000.
6. Tighten the terminal block connector screws.
7. Replace the green terminal block connector.
8. To complete the connection, attach the other end of the external serial cable to the serial port connector located on the back of your computer.

Powering Up Sequence

After mounting the analyzer, connecting the gas sampling lines and checking for leaks, and connecting the (optional) output signal wires, you are ready to power up the analyzer.It is possible to apply AC power or DC power (9-16 or 18-32) before the gas lines are connected to ensure the analyzer is functional, but ambient air contains levels of water vapor that are much higher than the instrument is designed to measure. Therefore, valid H_2O readings cannot be obtained until sample gas is flowing through the sample cell.

There are two fuses located inside the black terminal blocks at the bottom right-hand side of the chassis (AC-powered unit). For the DC-powered analyzer, there is one fuse located on the power supply. If you need to replace a fuse, use only the same type and rating of fuse as the original.

Power up the Analyzer:

Power up the analyzer by energizing the circuit to the analyzer.

The system goes through a 15-second initialization period. The LCD on the keypad displays the word "**Initializing**" and then starts counting down from 15. The keypad does not respond during this time. Allow three additional minutes for the analyzer to stabilize before recording measurements.

Continuous updates of the measurement parameters displaying on the LCD indicate that the analyzer is operating normally (see **Figure 15**). The LCD displays four lines, the third of which is blank.

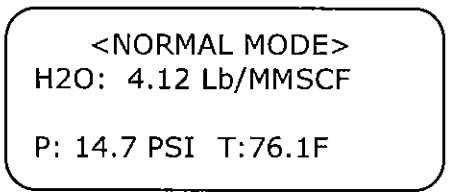

Figure 15: LCD on the keypad displays normal operational mode <Normal Mode>

Receiving Serial Data (RS-232 Output)

The RS-232 output transfers a string of data from the analyzer to a serial device. The serial device is typically a computer terminal running HyperTerminal, which is a program included with Microsoft® Windows® that allows for capturing serial port data.

SpectraSensors also provides a single software program, SpectrumPlot II, which allows an operator to perform all of the diagnostic functions for SpectraSensors' moisture analyzers. Refer to the instruction sheet included in the shipping box for more information. For analyzers with the ModBUS option, refer to the instruction sheet included in the shipping box.

To launch the HyperTerminal program, go to your computer desktop and click on the following:

- My Computer icon (usually located on the top, left side of desktop)
- C drive
- Program files
- Windows NT
- Hypertrm.exe

For quick access to HyperTerminal:

- Either save a HyperTerminal shortcut to the desktop or:
- From the **Start** menu located at the bottom left side of your computer desktop, click **Search**.
- Type in "hypertrm" in the **For files or folders** search dialog box.

Once HyperTerminal is activated, choose a name to save file as and any icon. The system prompts for Port Settings. Choose the appropriate port to which your analyzer is connected. The Port Settings should reflect the configurations in **Figure 16**.

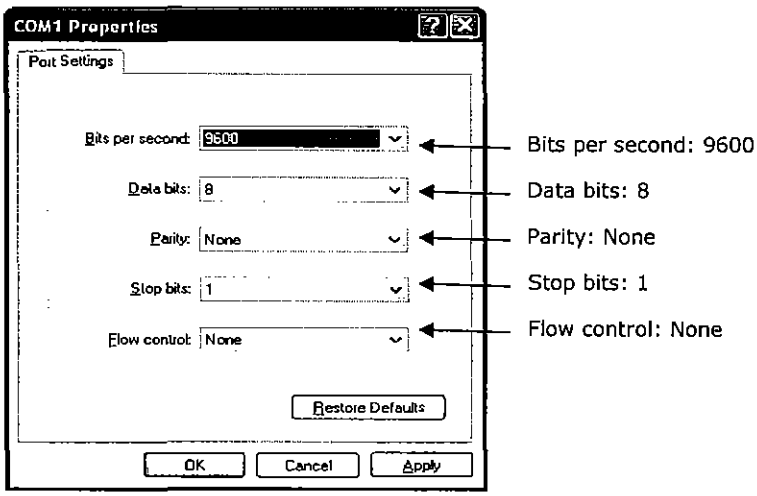

Figure 16: COM port settings

Reading the Data

If the analyzer is connected to the serial device as described on page 22, the data can be reviewed. The data string is space-delimited with a carriage return at the end of each line. The application arranges the data output in a column format from left to right in the following order (**Figure 17**):

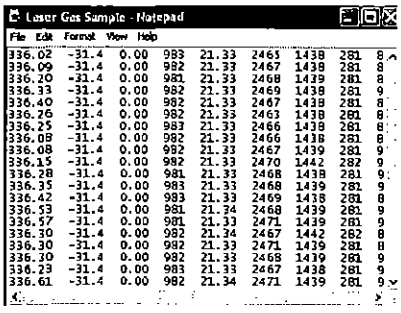
Laser Gas Sample - Notepad

File Edit Format View Help

```
336.02  -31.4  0.00  983  21.33  2465  1438  281  8
336.09  -31.4  0.00  982  21.33  2467  1438  281  8
336.20  -31.4  0.00  981  21.33  2468  1439  281  8
336.33  -31.4  0.00  982  21.33  2469  1438  281  9
336.40  -31.4  0.00  982  21.33  2467  1438  281  8
336.26  -31.4  0.00  982  21.33  2463  1438  281  8
336.25  -31.4  0.00  983  21.33  2466  1438  281  8
336.08  -31.4  0.00  982  21.33  2466  1438  281  8
336.08  -31.4  0.00  982  21.33  2467  1439  281  9
336.15  -31.4  0.00  982  21.33  2470  1442  282  9
336.28  -31.4  0.00  981  21.33  2468  1438  281  9
336.35  -31.4  0.00  983  21.33  2468  1439  281  9
336.42  -31.4  0.00  983  21.33  2469  1438  281  8
336.53  -31.4  0.00  981  21.34  2468  1439  281  9
336.57  -31.4  0.00  981  21.33  2471  1439  281  9
336.30  -31.4  0.00  982  21.34  2467  1442  282  8
336.30  -31.4  0.00  982  21.33  2471  1439  281  8
336.20  -31.4  0.00  982  21.33  2468  1439  281  9
336.23  -31.4  0.00  983  21.33  2467  1438  281  9
336.61  -31.4  0.00  982  21.34  2471  1439  281  9
```

Figure 17: Data output

- Channel A concentration
- Dew Point in Sample Cell
- Channel B concentration
  (zero if Channel B is not present)
- Pressure
- Temperature
- PP2F value
- Power value
- Peak Position (Index)
- Null (Zero)

*For saving this data to a text file see Reading Diagnostic Data With HyperTerminal.

Calibrating the Analyzer is not Required

There is no need to adjust parameters (RCalb or Zero Offset) in the field other than the measurement units. SpectraSensors calibrates the analyzer to a National Institute of Standards and Technology-traceable standard. Unlike aluminum oxide or electrolytic sensors that are in contact with the sample gas, SpectraSensors uses a non-contact form of measurement that shines through the sample cell; no sensors come into contact with the gas. In addition, drift or contamination from contaminants, such as glycols or amines in the gas phase, is not possible.

However, zero offset drift may occur with any Spectrasensors analyzer that contains desiccant in the optical head. Depending on the environment, the ability for the desiccant to absorb moisture may reduce over time, most likely after the recertification interval of three years. For correct procedures to adjust the zero offset, see troubleshooting.

Note that any calibrations must be performed with the same type of background gas that is used in normal operation. For example, the natural gas analyzer cannot be calibrated using moisture in nitrogen or air standard. It must be calibrated using moisture in natural gas.

OPERATING THE ANALYZER

The SS500, SS2000, and SS3000 are specifically designed to measure levels of H_2O and CO_2 in a gas stream. They also report the temperature and pressure of the sample gas in the sample cell.

Although an analyzer can easily be dismounted and moved from one sampling station to another, it is designed to be a stationary measuring device. It should be securely mounted during normal operation. For portable applications, use the SS1000 instead.

Opening the main enclosure cover is required for installation only. Thereafter, you will rarely need to open the cover of the main enclosure for inspection or maintenance. Subsequent to installation, do not open the enclosure for this purpose unless directed to do so by a service representative. Do not open the sample cell assembly.

The laser housing labels on the flanges of the sample cell warn about exposure to laser radiation inside. Never open the sample cell unless the analyzer power is turned off.

The optical head and "Warning" sticker on the optical head assembly have seals on them to prevent inadvertent tampering with the device. Do not attempt to compromise the seal of the optical head assembly. Doing so will result in loss of device sensitivity and inaccurate measurement data. Repairs can then only be handled by the factory and are not covered under warranty.

Using the Keypad

The keypad allows the operator to modify certain parameters that control the analyzer, like change measurement units and calibration, and perform diagnostics. However, once the analyzer is installed and operating normally, there should be no need to alter the operational parameters. The LCD continuously displays measurements of H_2O and/or CO_2, temperature, and sample cell pressure. For dual channel H_2O systems, the LCD displays Channel A and Channel B.

Keypad Instructions

To activate any functions on the keypad, press the mode key **#**, and then press a number on the keypad to specify a mode or press the **test** key to display system test parameters (see **Figure 18** on page 30).

You must press the mode key # before pressing a number or function key to trigger a response from the keypad.

When you press the mode key **#**, the word **MODE** displays on the LCD. At this point, the analyzer waits for you to press a second key.

The * key functions as the "enter" key. The analyzer saves the displayed parameter value when you press this key. Always press * after entering a value on the keypad unless the entry was made in error.

If you do make an error, press **#1** to return to the normal mode without saving.

Modes and Functions Defined

Use the keypad to access the following modes by pressing the mode key **#** first and then pressing a number (1, 2, 3, 4, 5, or 6) to activate a mode or **test** for error status information. The mode definitions are:

- **Mode 1** - Normal display mode
- **Mode 2** - Provides change of parameters for Channel A
- **Mode 3 -** Provides change of parameters for Channel B **(SS3000 only)**
- **Mode 4** - Displays system diagnostic parameters for Channel A
- **Mode 5** - Displays system diagnostic parameters for Channel B **(SS3000 only)**
- **Mode 6** - Outputs spectra and calculations to serial ports
- **Mode Test** displays system error status

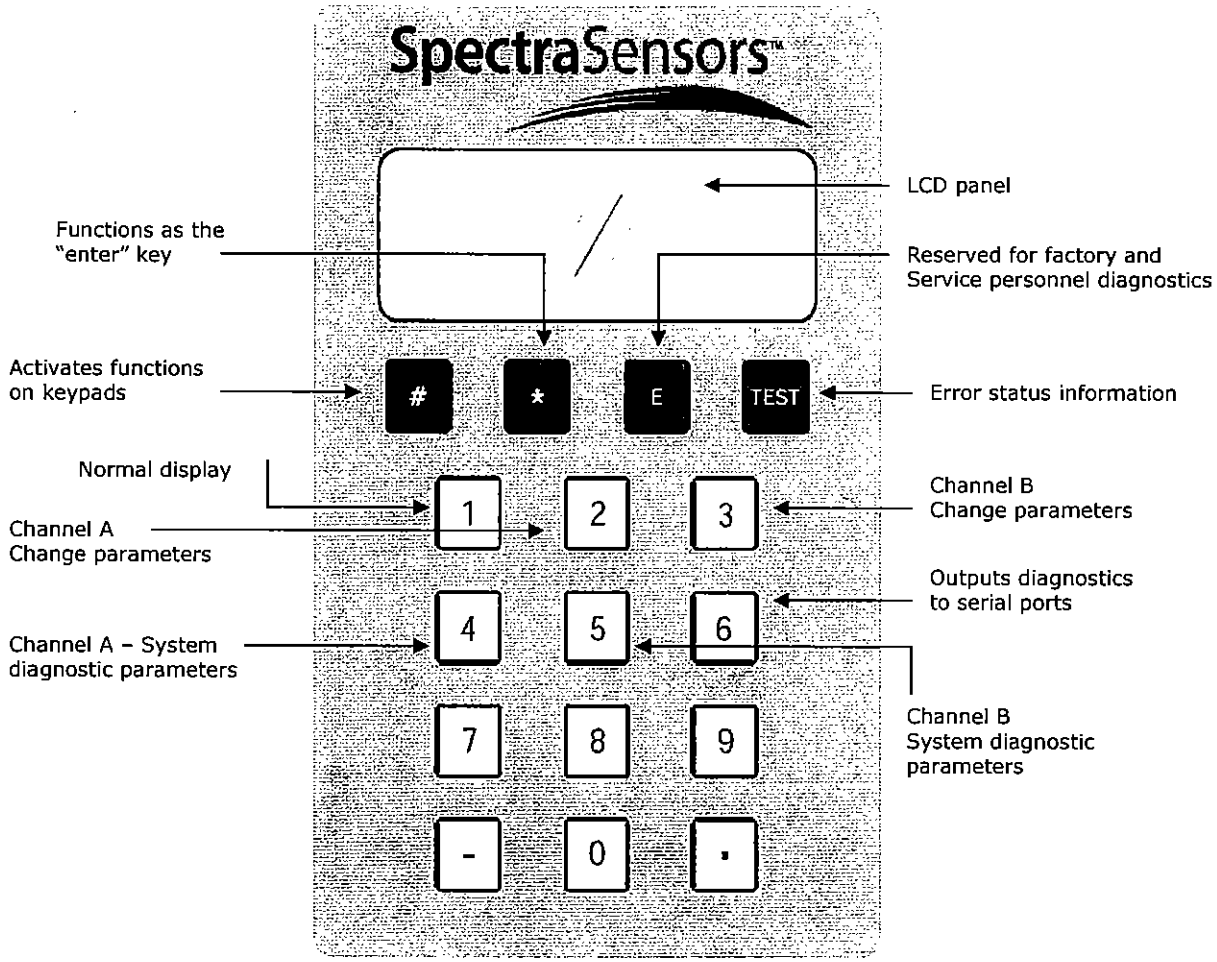

Figure 18: SS500/2000/3000 keypad

Using Modes and Functions

The following section explains each mode and the information that displays on the LCD.

Mode 1: Normal Display: Continuously displays updated measurements.

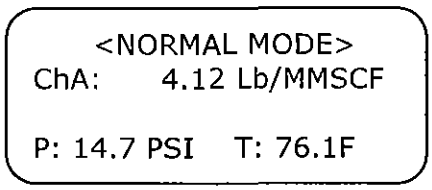

SS500/SS2000

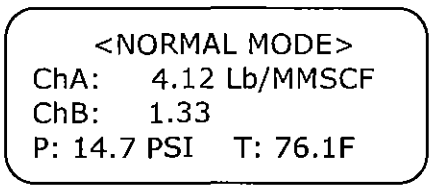

SS3000

ChA: Water vapor concentration in units selected in Mode 2.

Note that for the SS500 units the display will show <1.8 lb/mmscf (<38ppmv) when concentrations are below the lower limit of measurement

ChB: Concentration (H_2O or CO_2 depending on model number) in units selected in Mode 3.

P: Pressure in the Channel A sample cell in units selected in Mode 2.

T: Temperature in the Channel A sample cell in units selected in Mode 2.

Mode 2: Channel A Measurement Parameter Change: Allows you to view and change Channel A (usually H_2O) measurement parameters (see **Table 6** on page 32).

After pressing the **#** key and then the **2** key, the LCD prompts for a numeric password.

Enter the user password (**3142**) on the keypad, then press the * key to enter the number.

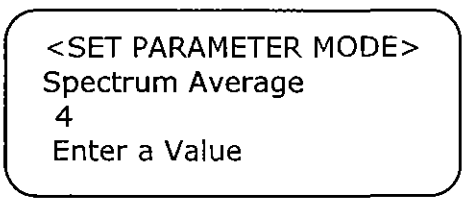

SS500/SS2000/SS3000-Channel A

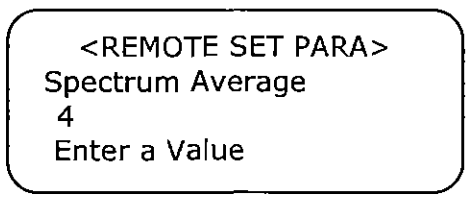

SS3000-Channel B

The user password is 3142, the first four digits of the value of π. Although the user password allows the calibration to be changed by setting the Zero Offset or RCalb parameters, this is not recommended. The factory calibration should not need to be changed in the field. Before attempting to change the calibration, contact the factory for advice on calibration changes.

This matrix provides the Channel A (usually H_2O) measurement parameters, which can be viewed and changed by following the instructions previously noted.

Parameter	Setting	Function
Spectrum Average	1 – 10 default = 4	Sets the number of scans that are averaged for each display reading.
RCalb*	3000 – 5000 H_2O 500 – 1500 CO_2	Sets the gain calibration for H_2O or CO_2 measurements.
Alarm Action	0 or 1	Determines if the concentration values go to full scale or "0" on an alarm condition.
Zero Offset*	0 – 100 ppmv for H_2O, 0 - 1% for CO_2	Sets the zero offset for H_2O or CO_2 measurements.
Logger Rate	1 – 300 readings default = 4	Sets the display and current loop integration time to match data logging interval.
Temperature unit	0 or 1	Sets the display unit for temperature.
Pressure unit	0,1,2, or 3	Sets the display unit for pressure.
Concentration unit	0 or 1	Sets the display unit for the water concentration.
Peak Tracking	0 – 2	Sets peak tracking capability to be off, on, or reset.

*Parameter affects the calibration

Table 5: Typical values for parameter set points

Changing parameters for Mode 2.

Spectrum Average

```
   <SET PARAMETER MODE>
Spectrum Average
4
Enter a value
```

This value is the number of scans that the analyzer averages for a spectrum calculation. The more spectra averaged, the less the noise, but the longer the response time. Each scan adds about 0.25 seconds to the response time. For example, if the Spectrum Average is set to "4," an updated concentration value will be calculated about once per second. Enter a value from 1 to 10. Pressing the * key enters the value and cycles the LCD to the next parameter.

RCalb

```
   <SET PARAMETER MODE>
RCalb
3950
Enter a value
```

RCalb is the gain calibration factor for the concentration measurement. This number should not be changed from the factory setting unless calibration equipment is available and a full calibration procedure is followed. Press the * key to enter the value and cycle to the next parameter.

Alarm Action

```
   <SET PARAMETER MODE>
Alarm Action
0
0->0   1->Full Scale
```

This parameter determines whether the current loop output value is set to "0" or "Full Scale" in the event of an alarm condition. Press the value for the action desired and then press the * key to enter the value and cycle the LCD to the next parameter.

Zero Offset

<SET PARAMETER MODE>
Zero Offset
8
Enter a value

For concentration measurements, it is necessary to compensate for small amounts of background gas that absorb some laser light and introduce an offset into the measurements. This number should not be changed from the factory setting unless calibration equipment is available and a full calibration procedure is followed. For zero offset adjustments, consult factory. For both H_2O and CO_2 channels, the zero offset is in PPMV. Press the * key to enter the value and cycle to the next parameter.

Logger Rate

<SET PARAMETER MODE>
Logger Rate (s)
4
Enter a value

For applications where an external data logger is used, use the logger rate to set the averaging period used by the analyzer to match the data logger rate. The display and the current loop output will have a value equal to the average of the concentration over the last interval determined by the Logger Rate. For example, if the Spectrum Average is set to "4", there will be a new measurement of concentration taken every one second (Spectrum Average * 0.25sec). By setting the logger rate to "60", the display value and current loop output will average over the previous 60 seconds. If the data logger samples the loop current each 60 seconds, it will always see the average concentration over the interval since its last sample.

Enter a numeric value (in readings) and press the * key to enter the value and cycle to the next adjustable parameter.

Temperature Unit

<SET PARAMETER MODE>
Temperature Unit
0
0 ->C 1->F

Choose either "C" or "F." to have the analyzer display data in a specific temperature unit. The default value is the standard unit of measurement in the region the analyzer is being used. Press the value for the units you desire. Pressing the * key enters the value and cycles to the next parameter.

Pressure Unit

```
<SET PARAMETER MODE>
Pressure Unit
3
Enter a value
```

The Pressure Unit parameter, which measures absolute pressure, provides four choices for displaying the pressure measurement:

- **0** for millibar
- **1** for Torr
- **2** for Pascal
- **3** for PSIA

Pressing the * key enters the value and cycles the LCD to the next parameter, Concentration Unit.

Concentration Unit

```
<SET PARAMETER MODE>
Concentration Unit
1
0:ppmv   1:lb/mmscf
```

This parameter provides two options for displaying water concentration units:

- **0** for ppmv
- **1** for Lb/mmscf

Pressing the * key enters the value and cycles the LCD to the next parameter.

Note: This parameter is disabled for the CO_2 unit, which always displays in percentage.

Peak Tracking

```
<SET PARAMETER MODE>
Peak Tracking
1
0:Df 1:Track 2:Reset
```

The peak tracking function allows the software to continuously adjust the laser current to keep the water absorption peak at the center of the scan. In most cases, the peak tracking should be left on (set to 1). If "tracking error" is displayed or PkD1 is more than four counts different from PkDf, reset the peak tracking feature by pressing 2.

This parameter provides three options to control peak tracking:

- **0** to shut off peak tracking
- **1** to turn on peak tracking
- **2** to reset peak tracking

Pressing the * key enters the value. This is the last parameter. Press the mode key **#** followed by **1** to return to Normal mode.

Mode 3: Measurement Parameter Change for Channel B: Mode 3 allows the operator to access and change parameters for the second channel (either CO_2 or H_2O) in the same manner Mode 2 is used to alter the parameters for the first channel. The menus for Mode 2 and Mode 3 are identical. **(Model 3000 only)**

On a Model SS500 or SS2000, the Normal mode displays.

Mode 4: System Diagnostic Parameters for Channel A: Mode 4 displays system diagnostic data for Channel A. These values may be useful when troubleshooting the system.

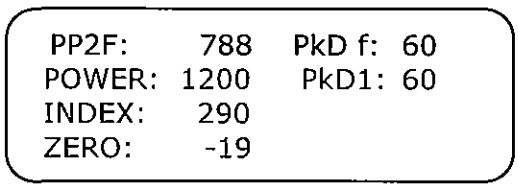

SS500/2000

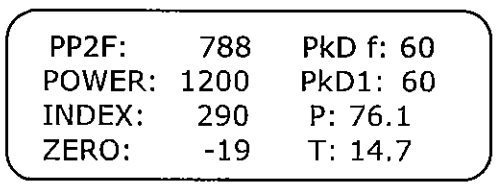

SS3000

PP2F: Shows the value of the concentration signal in A/D counts. A normal range is 0 to 6000 depending on the concentration of water present.

Power: Shows the laser power detected at the absorption peak in A/D counts. Acceptable values are between 300 and 3000. A number below 1000 may indicate that either the optics need to be cleaned or there is an alignment problem. A value below 300 will cause a "Power Fail error."

Index: Shows the position of the absorption peak within the wavelength scan. It should normally be at 290 with the peak tracking turned on. Values outside of the range of 241 to 339 indicate a Spectrum Fail error condition.

Zero: Shows the detector signal value when the laser is turned off. It should be in the range of –40 to +40. Outside of this range, a "Null Fail error" displays.

PkDf: The factory laser current setpoint in mA that matches the target absorption line.

PkD1: The laser current setpoint after adjustment by the peak-tracking software. It should be within a few mA of the PkDf value. If the analyzer is experiencing problems, one of the first troubleshooting steps should be to check the peak tracking.

"Tracking error" may be displayed if PkD1 differs by more than 4 mA from PkDf.

For more information on troubleshooting these issues, see Troubleshooting on page 45.

Mode 5: System Diagnostic Parameters for Channel B: Displays the System Diagnostic Parameters for Channel B **(Model SS3000 only).**

The description and normal ranges are the same as for Mode 4.

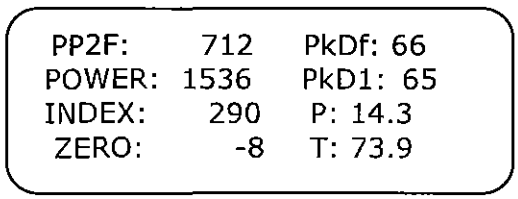

SS3000

If you select this mode in an SS500 or SS2000, the analyzer will return to Normal mode.

Mode 6: Diagnostic Data Download: Used to transfer diagnostic data to the serial ports and read the individual data points of both the DC and 2F spectra that the instrument analyzes to calculate the gas concentration.

Viewing these data can be helpful in diagnosing problems with the analyzer. The data points, along with intermediate calculation results, are output to the serial ports whenever

Mode 6 is selected. The data for Channel A is output on the Channel A serial port and the data for Channel B (in Model SS3000 analyzers) is output on the Channel B serial port.

Mode Test: The **TEST** key provides basic diagnostic test results for laser power, pressure, and temperature sensors, and the infrared spectrum that the system records for analysis.

The LCD displays the following for a SS3000:

```
        <TEST MODE>
ENTER SELECTION

1= CHA   2= CHB
```

In the case of a SS500/SS2000 single channel system, this screen is not shown and one of the screens below displays instead.

To view the Channel A data, press **# 1** and the LCD displays the following:

```
     <CHA SYSTEM TEST>
LASER POWER: OK
P,T SENSORS:  OK
SPECTR:OK      NULL:OK
```

To view the Channel B data, press **# 2** and the LCD displays the following:

```
     <CHB SYSTEM TEST>
LASER POWER: OK
P,T SENSORS:  OK
SPECTR:OK      NULL:OK
```

If a failure is detected, the LCD displays "FAIL" for that component. If the LCD displays a failure for one or more of the components, refer to the Troubleshooting section.

Scaling and Calibrating the Loop Signal

The 4-20mA current loop signal is most conveniently scaled and calibrated at the receiving end (RTU, flow computer, etc.). The analyzer's current loop output is forced to 4mA and 20mA and the receiver is adjusted to read "0" or full scale (usually 20 lb/mmscf).

Be sure to work in a non-hazardous area while handling this connector.

To Scale the Current Loop Signal:

1. Make sure the current loop is connected and the receiver is set for the analyzer to source the current.
2. Force the analyzer into an error condition by disconnecting the small inline circular connector on the cable coming from beneath the insulation on the sample cell. When the cable is disconnected, the display shows **P/T Fail Error** and the moisture concentration changes to either **0** or **full scale**.
3. Changing the **Alarm Action** setting changes the display and output states. To change the **Alarm Action** settings, enter the **Set Parameter** mode by pressing the **#** key and then the **2** key (for Mode 2). When prompted for a password, press **3142** and the * key to enter the number.
4. Press the * key multiple times until **Alarm Action** displays.
5. Press the **1** mode to force the loop current to 20mA, or **0** to set the loop current to 4 mA when an **Error** is present.
6. Press the * key to enter the setting. Press the **#** key and then press the **1** key to return to the display of **P/T Fail Error**.
7. Adjust the receiver calibration control to read the appropriate value. **4 mA always represents zero concentration.**
8. Reset the **Alarm Action** to the opposite state and adjust the receiver calibration controls for the new state. If needed, repeat steps 5–8 to obtain an accurate calibration over the range.
9. After obtaining an accurate calibration, reconnect the temperature connector to restore the normal function of the analyzer.

Reading Diagnostic Data With HyperTerminal

Any computer terminal program that works with the RS-232 serial port can capture the serial port data. The HyperTerminal program included with Microsoft Windows® is a typical example of such a program. Before entering Mode 6, the serial port should be connected to the computer used for monitoring the serial port and the output stream should be showing on the screen. The number of seconds between each line of data output should be the Spectrum Average number set in Mode 2 divided by 4. The factory default setting of Spectrum Average of 4 gives a line of output each second. To save the data from the serial port, use the capture feature on the terminal program. (For HyperTerminal, use the **Transfer/Capture Text** function and enter a file name to identify the data you want to capture.) Once capturing is in place, enter Mode 6.

Press **# 6**, which displays:

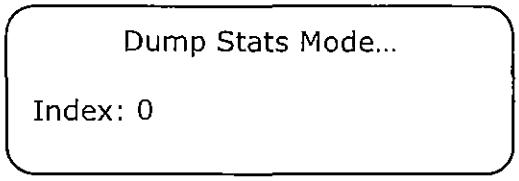

The index counts by 50's from 0 to 511 in a few seconds and the screen displays:

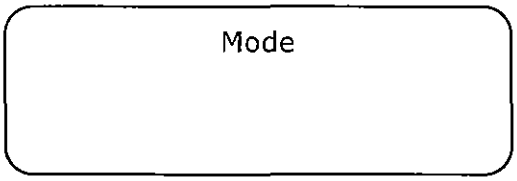

Press **1** to return to normal operation. When normal operation resumes, stop the capture of the serial data. (For the HyperTerminal program, press **Transfer/Capture Text/Stop**.) You can import this file into a spreadsheet program such as Microsoft® Excel® to plot the data. See the next section for more information.

At the end of the spectrum data, a section displays the intermediate calculations. This information is important to retain if the analyzer needs to be returned to the factory for troubleshooting.

Reading Diagnostic Data with Microsoft Excel

A spreadsheet program such as Microsoft Excel can view the data collected in the Mode 6 data dump. The data file is space-delimited and tab-delimited.

To import the file into Excel:

1. In Excel, click **Open** and choose the name of the spectrum file saved in Mode 6. Be sure to select File type "all" (*.*).
2. The Text Import Wizard opens; choose the **Delimited** option and click **Next**.
3. Choose **Tab** and **Space** options, along with selecting the **Treat consecutive delimiters as one box**, and then click **Finish**. The spreadsheet displays. The first few lines look like the normal serial output data received before the Mode 6 command was entered in the SS2000. Look for the row that has the cells: **Idx—DC-AC**.
4. Move the cursor to the first cell under **AC**. Select the three columns by 512 rows. (Hold the shift key down and press the **End** key. Hold the shift key down and press the **Down arrow** key. This highlights the **AC** column.) Keep holding down the shift and press **End**, then left arrow. This should highlight all three columns.
5. Click the **Chart Wizard** button on the Task Bar.
   The **Chart Wizard** displays.
6. Choose the **X-Y (scatter)** chart type and click **Finish**.
   A graph of the spectrum displays. If the lower-red curve is very flat, double click on it, select the **Axis** tab, and select **Plot series on Secondary Axis** (see **Figure 19** on page 41).

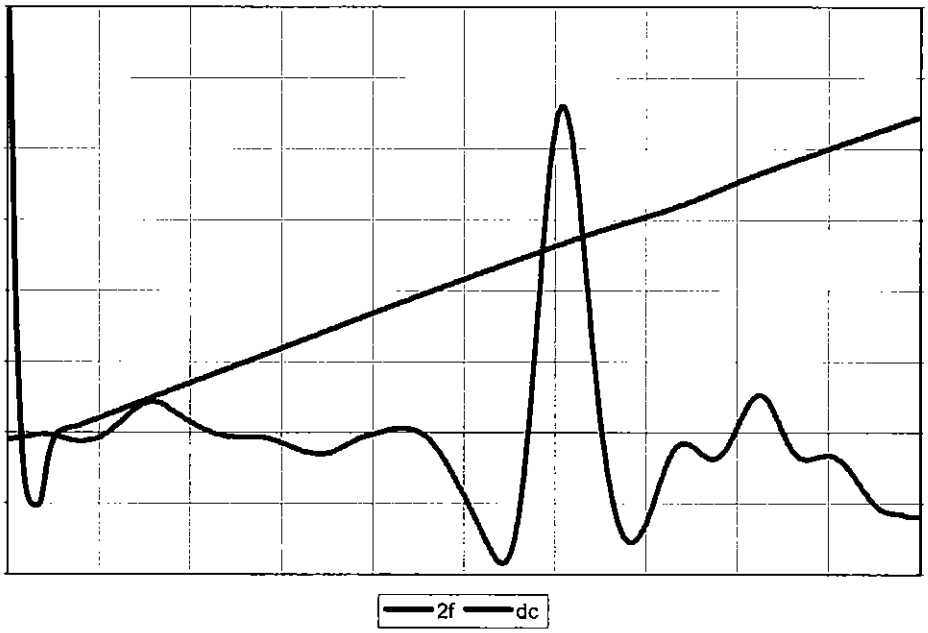

Figure 19: Mode 6 data dump displayed in graphical format using Excel

Using SpectrumPlot II Software

Using a single program, SpectrumPlot II, you can perform the following diagnostic functions for SpectraSensors' moisture analyzers:

- Continuously viewing the serial output stream
- Capturing downloaded data
- Viewing and saving captured data
- Viewing previously archived data

System requirements:

- Windows 98®, 2000®, XP® operating systems
- Serial Com Port
- > 1024 x 768 screen resolution

To install the software:

1. Load the SpectrumPlot CD-ROM onto your computer.
2. In the CD-ROM drive, double-click the **Installer** folder.
3. Run setup by double-clicking **setup.exe**.
   The installation screen displays.
4. Choose where to install the program.
   The default is C:\Program Files\SpectrumPlot_v2.
5. Click **Finish**.

To operate the software:

1. Connect the analyzer to your computer via a serial cable to receive data.
2. In the SpectrumPlot directory chosen during installation, double-click **SpectrumPlot_v2.exe**.
   The application should also add a shortcut to the Start menu.
3. Select whether you would like to receive data through the serial port.

   Yes, the application prompts for a COM port and streaming data should be visible in the textbox. This data contains both measurement and diagnostic data.

   No, the application is ready to view previously saved spectrum data.

The application will indicate an error if it can't access the COM port (another program may be using it). It will timeout if data isn't received within 30 seconds (no error indication).

4. To view spectrum, press **Clear** to first clear the graph and then press **# 6** on the analyzer keypad. Two plots display, **DC** on the left and **2F** on the right (see **Figure 20** on page 43).
5. Return to Normal mode **1**, otherwise the application will time out if data isn't received within a 30 seconds. In this case any initiated command such as "Open" will take place after 30 seconds.
6. To save the data, press the **Save** button, choose **Directory**, and specify file name.
7. To print the graphs, press the **Print** button.
8. To open a previously saved spectrum, press the **Open** button and choose **File**.

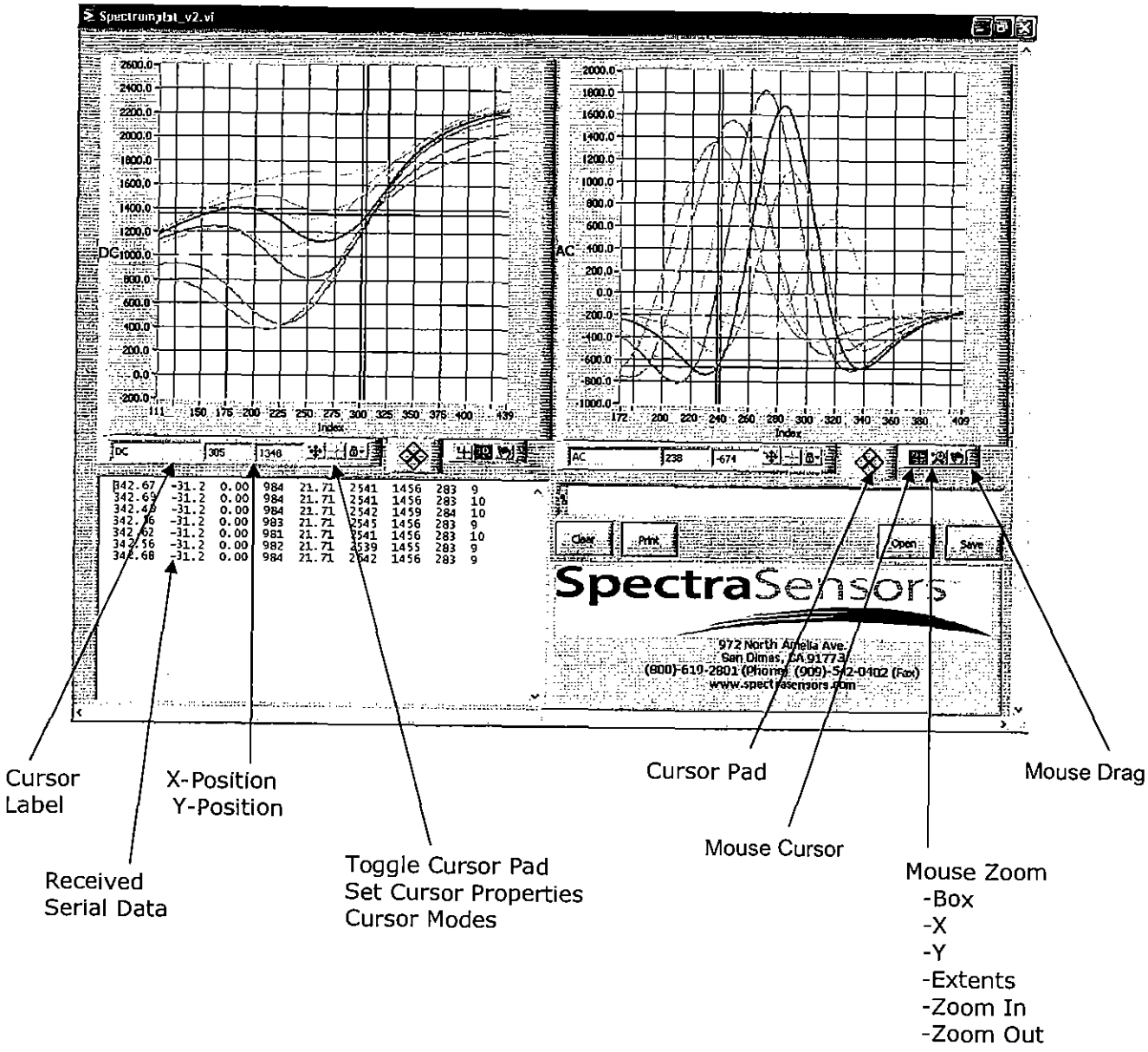

Figure 20: SpectrumPlot view

For additional functions and troubleshooting, please refer to the software instructions included on the Spectrum Plot software c.d.

How to Avoid Contaminating the Analyzer

Contamination in the gas sampling lines can contaminate the optics and absorption cell and cause problems. To keep the sampling lines clean and improve response at very low moisture:

1. Make sure that a membrane separator filter is installed ahead of the analyzer and operating. Replace the membrane if necessary. Small amounts of glycol or amine in the gas phase should not cause problems as they will be swept out of the sample region by the gas flow and they do not affect the measurement in any way. If liquid enters the cell and accumulates on the internal optics, a "Power Fail Error" displays.
2. Press **#** and then **TEST** on the keypad to activate the Test mode. Test mode will indicate a failure in laser power if the mirrors become contaminated.
3. Disconnect the gas sampling inlet line from the analyzer.
4. Wash the sampling line with alcohol or acetone and blow dry with mild pressure from a dry air or nitrogen source. It may be necessary to heat the lines for a few minutes to clear residual solvent from the lines.
5. Reconnect the gas sampling.

The sample cell assembly contains a low-power Class 3B invisible laser. Never open the sample cell flanges or the optical assembly unless the power is turned off.

Disconnecting or Powering-Down the Analyzer

To power-down the analyzer, disconnect power from the gas sensor circuit. There is no specific sequence beyond that step for shutting down the analyzer.

If the analyzer is going to be shut down for some time, it is recommended that the sampling gas line shut-off valve be turned off as well. Also, disconnect power to prevent damage from lightning strikes.

TROUBLESHOOTING

This section presents recommendations and solutions to common problems, such as gas leaks, high humidity, excessive sampling gas temperatures and pressures, electrical noise, and peak tracking problems. If your analyzer does not appear to be hampered by one of these related problems, see the **Table 7** on page 51.

Gas Leaks

Probably the most common cause of erroneous measurements is outside air leaking into the inlet sampling line. It is recommended the inlet lines be periodically leak-tested, especially if the analyzer has been relocated or if the analyzer has been replaced or returned to the factory for service and the sample lines have been reconnected. Never use plastic tubing of any kind for a sample line because water vapor can permeate the plastic lines.

Do not exceed 10 PSIG in the sample cell. Damage to the cell window may result.

High Humidity

High humidity or condensation of water in the sample lines may cause temporary high readings. If the analyzer is exposed to these conditions for long periods, sampling lines may take a long time to completely dry out. Allow sufficient time for the walls of the sample cell to dry completely so that the analyzer can return to its ability to make accurate measurements.

Humidity levels higher than expected may be caused by leaks in the sample system or tubing leading to the analyzer. All wetted parts should be made of stainless steel wherever possible. Materials such as vinyl, rubber, or PVC will dramatically impair the instrument's measurement performance and will interfere with accuracy. Pressure regulators installed upstream of the analyzer should be of high quality and fitted with stainless steel diaphragms.

Any hygroscopic material (dust or glycol) in the lines or sample cell can further increase the time needed to return the measurements to normal levels.

Contamination and long exposure to high humidity are valid reasons for periodically cleaning the gas sampling lines (as outlined in the How to Avoid Contaminating the Analyzer).

Excessive Sampling Gas Temperatures and Pressures

Errors can arise from sample cell temperature and pressure that exceed the ranges allowed by the software. These ranges are 0.7 to 1.7 bar (10.3 to 25.0 PSIA) for pressure and –20° to +50°C (4 to 122 °F) for temperature. Inlet sampling gas temperatures and pressures

must stay within these ranges in order to obtain accurate measurements. **P/T Fail Error** displays on the LCD outside this range.

If the pressure, temperature, or other readings on the LCD are suspect, they should be checked against the specifications in the Specifications sections starting on page 10.

Electrical Noise

High levels of electrical noise can interfere with laser operation and cause it to become unstable. Always connect the analyzer to a properly grounded power source.

Verification of Offset Parameter

If it seems the concentration values are off by a fixed amount above actual, the zero offset parameter may need to be adjusted. There are two ways to check if the zero offset parameter needs to be adjusted. The first is by using a dry gas sample (<1ppmv) consistent with the background gas the analyzer was designed to measure. The second way to perform a zero offset adjustment is by using a very reliable and efficient desiccant dryer. If and only if the analyzer reads more than four ppmv is it necessary to make any zero offset adjustments to the analyzer. Zero offset adjustments are made in whole ppmv increments. Access the parameter "Zero Offset" and add the amount measured to the existing value. For example, if after the reading on the analyzer stabilizes and it reads four and the current offset is eight, then the "Zero Offset" parameter should be changed to 12. For more information contact service at the factory.

Peak Tracking Reset Procedure

The analyzer's software is equipped with a peak tracking function that keeps the laser scan centered on the water vapor absorption peak. Under some circumstances, the peak-tracking function can get lost and lock on to the wrong peak. A large difference in the values of PkDf and PkD1 on the display in the Diagnostic Mode 4 can indicate such a problem. If the difference between PkDf and PkD1 is more than 4, or Tracking Error is displayed, the peak tracking function should be reset. To reset the peak tracking function for Channel A and B:

1. Enter the user parameter Mode **2**
2. Enter customer password: **3142**
3. Press the * key until the peak tracking parameter appears
4. Enter **2** (reset) to turn off the peak tracking
5. Press the * key to enter change
6. Press **# 1** to return to Normal mode

For Channel B, use the same procedure above except use Mode **5** to read the diagnostic data and use Mode **3** to set the parameters. This should restore the peak tracking function.

Instrument Problems

If the instrument does not appear to be hampered by gas leaks, high humidity, excessive sampling gas temperatures and pressures, electrical noise, or a peak tracking problem, refer to the Instrument Problems matrix before contacting your representative for service.

How to Resolve Potential Instrument Problems	
Symptom	**Response**
Non-Operation (at start up):	Is the power connected to both the analyzer and power source? Is the switch on?
Non-Operation (after start up):	Is the power source good? (100 to 250 VAC @ 50-60 Hz, 9-16 VDC, 18-32 VDC).
	Check fuse(s).
	Contact sales representative for further troubleshooting.
Power Fail Error	Verify power failure by pressing **# 4** and checking the DC value. If it is greater than 500, then the Power Failure is spurious. Return to **# 1** and see if the error has changed.
	If the power is less than 50, turn off the power to the unit and check the optical head cables for a loose connection. **Do not disconnect or reconnect any optical head cables with the power connected.**
	Check the inlet and outlet tubes to see if they are under any stress. Remove the connections to the inlet and outlet tubes and see if the power goes up. Perhaps the existing tubing needs to be replaced with stainless steel flexible tubing.
	Capture a data dump (**# 6**) and send the file to SpectraSensors.
	Possible Alignment problem.
	Possible mirror contamination issue, contact sales representative for service information.

How to Resolve Potential Instrument Problems	
Symptom	**Response**
Display shows Null Failure	Verify Null failure by pressing **# 4** and checking the zero reading is outside the range of –40 to 40. If not, the Null Fail is spurious. Return to **1** and see if the error has changed.
	Move the jumper JMP1 on the HC12 main board next to the Pre-pot.
	Capture a data dump (**# 6**) and send the file to SpectraSensors.
Spectrum Fail Error	Verify Spectrum Failure by pressing **# 4** and checking the index value. If it is within a few counts of xleftvmr or xrightvmr, then it is a real Spectrum Failure.
	Check optical head cable connections. **Do not disconnect or reconnect any optical head cables with the power connected.**
	Turn the analyzer off for 30 seconds and then turn it on again.
	Reset the peak tracking.
	If the index is within a few counts of xleftvmr, then decrease the midpoint value by three mA. (This is most likely if the unit is either very hot or very cold compared to the normal operating temperature.)
	If the index is within a few counts of xrightvmr, then increase the midpoint value by three mA. (This is most likely if the unit is either very hot or very cold compared to the normal operating temperature.)
	Capture a data download (**# 6**) and send the file to SpectraSensors.
Front panel display is not lighted and no characters appear	Check for correct voltage on terminal block input. Observe polarity on DC powered units.
	Check for correct voltage after fuses.

How to Resolve Potential Instrument Problems	
Symptom	**Response**
	Check for 5VDC on red wires and 12VDC on yellow wires from power supply (black wires are ground).
	Check connections on display cable.
Front panel display is not lighted and characters appear	Check for 4.3 VDC on pin 15 of J2 going to the display.
Strange characters appear on front panel display	Check connections on display cable.
Pressing keys on front panel do not have specified effect	Check connections on keypad cable.
No reading on device connected to current loop	Make sure that connected device can accept 4-20 mA signal from SpectraSensors. The analyzer can only source current.
	Make sure the device is connected to the correct pins on the green connector.
	Check the open circuit voltage across the current loops pins 6 and 7 (Pins 8 and 9 as well for the SS3000) on the green connector.
	Replace the current loop device with a milliampere meter and look for current between 4 mA and 20 mA. A voltmeter connected across a 250-ohm resistor can be used instead of the milliampere; it should read between 1 and 5 volts.
	On two channel units, swap the cables to the two current loop boards and see if the problem moves from one channel to the other.
Reading is stuck at 4-mA or 20-mA	Check display for error message.

How to Resolve Potential Instrument Problems	
Symptom	**Response**
	On the current loop board, check the voltage between the end of the resistor R1 closest to the jumper and ground. If the water reading is high, the voltage should be near 1VDC. If the water reading is low, the voltage should be near 4.7VDC. If not, the problem is probably on the HC-12 main board. Return to factory for service.
Reading seems to always be high by a fixed concentration	Increase the value of Zero Offset by the amount the reading is high in ppmv (1 Lb/mmscf = 21.1 ppmv). This will lower the reading.
	If the Zero Offset needs to be increased above 40, then the optical head is probably leaking and the unit must be returned to the factory for repair.
	See Verification of Offset Parameter.
Reading seems to be high by a fixed percentage of concentration	Increase the value of RCalb by the same percentage that the reading is high.
Reading is erratic or seems incorrect	Check for contamination in the sample system, especially if the readings are much higher than expected.
	Capture a data dump (**# 6**) and send the file to SpectraSensors.
Reading goes to "0"	If **Alarm Action** is set to **0**, look on display for an error message.
Reading goes to full scale	If **Alarm Action** is set to **0**, look on display for an error message.
	Gas concentration is greater than or equal to full scale value.
Serial Output is displaying garbled data	Make sure the computer COM port is set for 9600 baud, 8 data bits, 1 stop bit, no parity, and no flow control.
Serial Output is providing no data	Make sure the computer COM port is set for 9600 baud, 8 data bits, 1 stop bit, no parity, and no flow control.

How to Resolve Potential Instrument Problems	
Symptom	**Response**
	Make sure the connections are good. Verify the correct pin connections with an ohmmeter.
	Make sure the cable is plugged into the correct COM port that is selected by the terminal program.
PT Fail Error	Verify actual error by pressing **# 1** until the error message does not change.
	Check that the middle cable on the top of the unit is tight. Remove and reconnect the cable.
	If the pressure reading is incorrect, check the connector on the pressure transducer. Check the pressure connector on the backplane board.
	If the temperature reading is incorrect, check the connector on the cell temp sensor. Check the temp connector on the backplane board. (Note: A temp reading greater than 150C indicates a short circuit on the temp-sensor leads; a reading of less than –40°C indicates an open circuit).
LCD does not update. Unit is locked up.	Switch off power, wait 30 seconds, and then switch power back on.

Table 6: Instrument problems matrix

Service Contact

If the troubleshooting solutions do not resolve the problem, contact your sales representative. Also contact your sales representative for a Return Materials Authorization Number before returning the analyzer to the factory. Your representative can diagnose whether the analyzer can be serviced on-site or should be returned to the factory.

Disclaimers

SpectraSensors accepts no responsibility for consequential damages arising from the use of this equipment. Liability is limited to replacement and/or repair of defective components.

This manual contains information protected by copyright. No part of this guide may be photocopied or reproduced in any form without prior written consent from SpectraSensors.

Warranty

The manufacturer warrants the items delivered shall be free from defects (latent and patent) in material and workmanship for a period of one year after delivery to the Buyer. The Buyer's sole and exclusive remedy under this warranty shall be limited to repair or replacement. Defective goods must be returned to the manufacturer and/or its distributor for valid warranty claims. This warranty shall become inapplicable in instances where the items have been misused or otherwise subjected to negligence by the Buyer.

Notwithstanding any other provision of this contract, no other warranties, whether statutory or arising by operation of law, expressed or implied, including but not limited to those of merchantability or fitness for particular purpose, shall apply to the goods or services hereunder, other than the repair and replacement warranty above. Seller shall in no event be liable to Buyer or any third party for any damage, injury or loss, including loss of use or any direct or indirect incidental or consequential damages of any kind.

INDEX

4-20mA current loop signal, 38
AC power, 20, 25, 47
Alarm Action, 33, 34, 39
Analyzer, 4
  calibrating (not required), 28
  connecting electrical power, 20
  connecting output signals, 22
  connecting serial output, 25
  connecting the gas lines, 18
  contaminating, 44
  current loop output, 38
  housing enclosures, 4
  how it works, 5
  inspecting, 7
  installing, 17
  laser sample cell, 5
  mounting, 18
  operating, 29
  powering down, 44
  powering up, 25
  reading data, 27
  receiving data, 26
  tools and hardware, 17
  troubleshooting, 45
  unpacking, 7
  using the keypad, 29
  warranty, 52
Calibration, 29, 32, 33, 34, 39
Connecting gas lines, 19
Connecting the electrical power, 20
Contaminating the analyzer, 44
Data download, 37
DC power, 20, 25
Diagnostic functions, 41
Diagnostic parameters, 37
Diagnostic test, 38
Diagrams of analzyers and enclosures, 15, 16
Disconnecting analyzer, 44
Electrical noise, 46
Electrical power, 20
Enclosures
  explosion-proof aluminum, stainless steel, fiberglass, 4
Errors, 37
Explosion-proof aluminum enclosure, 4, 5
Fiberglass enclosure, 4
Gas concentration, 37
Gas leaks, 45
Hardware, 17
High humidity, 45
High temperatures and pressure, 45
Housing enclosures
  explosion-proof aluminum, stainless steel, fiberglass, 4
HyperTerminal, 26, 27, 39, 40
Inspecting the analyzer, 7
Installing the analyzer, 17
  tools and hardware needed, 17
Keypad, 29
  diagnostic test, 38
  mode 1-measurements, 31
  mode 3- parameter changes, ch. B, 36
  mode 4- diagnostic data, 36
  mode 5-diagnostic parameters, ch. B, 37
  mode 6-data download, 37
  mode definitions, 30
  parameters, 30
  peak tracking, 35
  pressure parameter, 35
  temperature display, 35
  tracking errors, 37
  water concentration, 35
Laser sample cell, 5
LCD, 10, 11, 13, 26, 29, 31, 33, 35, 38, 46, 51
Mounting the analyzer, 18
National Institute of Standards and Technology, 28
Null Failure Error, 48
Output signals, 22
  connecting 4-20mA output, 23
Parameter changes, 30
Peak tracking, 35
Peak tracking reset, 46
Plastic tube, 19
Power down, 44
Power on, 26
Power supply, 20
Pressure, 5, 29, 32, 35, 38, 44, 45, 46, 51
Pressure measurement, 35
Problems with analyzer, 45, 47
PSIG (Pounds per square inch gauge), 19
RCalb, 32, 33, 50
Reading data, 27, 39
  with HyperTerminal, 39
  with Microsoft Excel, 40
Receiving data, 26
  HyperTerminal, 26
RS-232 output, 26
Scaling and calibrating loop signal, 38
Serial outputs, 22, 25
Shut down analyzer, 44
SpectraSensors, 4
  service contact, disclaimers, warranty, 51
  software to receive data, 26
  SpectrumPlot II software, 41
SpectrumPlot II, 7, 26, 41
  installating and operating software, 41
  system requirements, 41
SS2000, 4, 29, 40

SS3000, 1, 4, 5, 7, 12, 13, 14, 25, 29, 30, 31, 36, 37, 38
SS500, 1, 4, 5, 9, 10, 14, 25, 29, 30, 31, 36, 37, 38
Stainless steel enclosure, 4, 5, 17
Stainless steel tube, 19
System diagnostic data, 36
Temperature, 5, 29, 32, 38, 39, 45, 46, 48, 51
Test, 1, 4, 7, 17, 20, 26, 27, 30, 32, 34, 36, 37, 38, 39, 40, 41, 42, 44, 46, 47, 48, 50
Tools and Hardware, 17
Troubleshooting, 1, 37, 38, 45
Warning symbols
  electrical, laser, flammable, cautions, important notes, 2
Water concentration, 32, 35
Wiring, 20